NISTIR G2007-1865

A two-way computer interface between thermal and structural analyses: *GetGo 2.0* user's manual

Dat Duthinh
Abed M. Khaskia

National Institute of Standards and Technology
Technology Administration, U.S. Department of Commerce

NISTIR G2007-1865

A two-way computer interface between thermal and structural analyses: *GetGo 2.0* user's manual

Dat Duthinh
Building and Fire Research Laboratory
Materials and Construction Research Division

Abed M. Khaskia
Mallett Technology

September 2007

U.S. Department of Commerce
Carlos M. Gutierrez, Secretary

National Institute of Standards and Technology
James Turner, Acting Director

TABLE OF CONTENTS

ABSTRACT…… v

A. INTRODUCTION……..…… 1

B. USER'S MANUAL……..… 1
What GetGo does…….……. 1
What elements are supported…...…… 2
What procedures are used…… 2

C. THEORY MANUAL……... 3
Temperature transfer…… 3
Solid circular section…… 3
Circular tube…… 3
Solid rectangular section…… 4
Thin rectangular tube…… 4
I – section…… 4
T – section…… 5
L – section (angle)…… 6
Shell……. 6
User-defined section (MESH)……
6
Deflection transfer…… 7
Strain transfer…… 7

D. TEST CASES…… 7

E. CONCLUSION…… 8

REFERENCES…… 9

ACKNOWLEDGMENT…… 9

DISCLAIMER…… 9

FIGURES……..…… 10

APPENDIX 1: MACROS AND EXAMPLE INPUT FILES……..…. 21

Temp2body_ld transfers temperature results from thermal to structural……..…… 23
S_RECT solid rectangular beam section……..…….. 33
S_HRECT rectangular tubular beam section…….……... 39
S_CSOL solid circular beam section……..…… 45
S_CTUB circular tubular beam section…….……. 51
S_T T- beam section……..……. 57
S_I I- beam section……..…….. 63
S_L L-(angle) beam section……..…….. 69
S_SHELL shell elements (for slabs) …….…….. 75

S_MESH user-defined beam section……..……. 78
Geom_up transfers strains and deflections from structural to thermal and checks insulation 83
F_RECT solid rectangular beam section……..……..... 89
F_HRECT rectangular tubular beam section……..…….. 101
F_CSOL solid circular beam section…….
103
F_CTUB circular tubular beam section……..…… 106
F_T T- beam section……..……. 109
F_I I- beam section……..…….. 112
F_L L-(angle) beam section……...……. 115
F_MESH user-defined beam section……..……. 118

Example input file: THERMAL2STRUCTURAL …….……..….. 121

Example input file: STRUCTURAL2THERMAL ……..……..….. 126

Abstract

One recommendation of the National Construction Safety Team for the Federal Building and Fire Safety Investigation of the World Trade Center (WTC) disaster (NIST NCSTAR 1, 2005) was to enhance the performance-based capability of available computational software to predict the effects of fires in buildings. Such programs would prove useful in the design of fire protection systems and the analysis of building response to fires. One general purpose software used in the WTC investigation, for example, was capable of performing thermal and structural analyses, among other things. In its standard package, the transfer of temperatures from a thermal model to a structural model, or the transfer of deflections from a structural model to a thermal model could only be performed with compatible elements, i.e., solid –to-solid or shell-to-shell. This document seeks to remedy this situation through the development a procedure that allows temperatures within a solid thermal model to be transferred as thermal load input to a wide variety of common beam cross sections and shells with various number of layers in a geometrically compatible structural model. The document also develops a method to transfer deflections from a beam and shell structural model back to a solid thermal model, a step that is especially important in intense fires of long duration, when structural deflections may be significant enough to affect the thermal regime or damage the insulation. Although this computer interface was implemented for one particular software package, the methods developed are general and can be adapted to other, similar software.

Keywords: beam; finite-elements; insulation; interface; shell; solid elements; strain; structural analysis; thermal analysis

A. Introduction

The destruction of the World Trade Center towers on 11 September 2001 illustrated dramatically the need to treat fire as a structural load and to be able to predict analytically the procession of large, complex structures under fire from initiation to either burn-out or cooling, or to structural collapse. The extensive study performed by NIST (NIST NCSTAR 1, 2005) showed the need for improved computer software, particularly in the interface between well established capabilities, such as structural and thermal analyses. One recommendation of the National Construction Safety Team for the Federal Building and Fire Safety Investigation of the World Trade Center Disaster was to enhance the performance-based capability of available computational software to predict the effects of fires in buildings, for use in the design of fire protection systems and the analysis of building response to fires. In the case of a general purpose, commercial software used in the investigation, for example, the transfer of temperatures from a thermal model to a structural model, or the transfer of deflections from a structural model to a thermal model can only be performed with compatible elements, e.g., solid to solid or shell to shell. These types of elements are prevalent in thermal analyses, and are often used in structural analysis as well, especially in smaller structures where a manageable number of solid or shell elements may suffice. For larger, more complex structures, such as the World Trade Center towers, the use of beam elements to model the columns, floor and hat trusses is desirable to keep the structural model to a reasonable size. A procedure for efficient, general and automatic transfer of results between thermal and structural analyses is therefore needed. Temperature results would be transferred from the thermal to the structural analysis, so that the effects of thermal expansion and evolution of material properties with temperature can be determined over time; conversely, structural deflections and strains would be transferred back to the thermal model. This last step is especially important in the case of intense fires of long duration, where significant structural deflections may cause local damage to the insulation and move the structure to a different thermal regime. Furthermore, structural deflections may lead to changes in boundary conditions, such as new openings, that may affect the spread of the fire. This feedback would affect not just the thermal analysis, but the combustion analysis as well. This last aspect is, however, beyond the scope of this document. Although this computer interface was implemented for one particular software package, the methods developed are general and can be adapted to other, similar software.

B. User's manual

What GetGo does

The program *GetGo* provides a two-way interface between ANSYS thermal and ANSYS structural. *GetGo* complements the current capabilities of ANSYS 10 and 11.0, which only transfer data between compatible types of elements, such as solids to solids or shells to shells. *GetGo* allows data transfer – temperatures, deflections and strains– between a structural model that uses beams and shells, and a thermal model that uses solid (brick) elements. *GetGo* also detects insulation failure due to excessive strain.

What elements are supported

The elements supported by *GetGo* for structural analysis are:

Beam 188 (linear, two end nodes with three translations and three rotations per node, and a cross section orientation node mandatory for *GetGo*),

Beam 44 (elastic, linear, two end nodes with three translations and three rotations per node, and a cross section orientation node mandatory for *GetGo*),

Shell 181 (linear, multiple layers, four nodes, three translations and three rotations per node),

and for thermal analysis,

Solid 70 (linear, eight node brick, one temperature per node),

Solid 87 (quadratic, ten node tetrahedron, one temperature per node), and

Solid 90. (quadratic, twenty node brick, one temperature per node).

For beams, the most common singly symmetric and doubly symmetric cross sections are supported. They include: solid circular, circular tubular, solid rectangular, rectangular tubular, I - and T- sections. In addition, L (angle) – sections and user-defined, quadrilateral sections are supported. The beam and shell elements have to be defined with section properties and not real constants.

What procedures are used

To use the thermal-structural interface macros, the user needs to have both the solid, thermal model and the beam-shell structural model with all relevant files in the working directory. Both thermal and structural models must be geometrically compatible (within ANSYS tolerances) and have their global coordinate systems aligned and at the same location. If the thermal model has insulation and the structural model does not, then all insulation elements must be grouped into a component called INSULATION_E. When meshing with user-defined sections, one should group all lines meshed with any given section under a component named after that section.

To transfer temperatures, while in ANSYS, with the structural model in memory, and with the temperature results from the thermal analysis available, the user executes the macros with two arguments, the first of which is the name of the thermal job enclosed between single quotes, and the second (optional) is the time used to identify a particular thermal solution, as follows: *Temp2body_ld,'thermjob', 100.* If no solution is available at the specified time, the solution at the nearest time is used. If time is not specified, the last solution in the results file is used by default. The command is issued in the preprocessor domain (PREP7) and the database of the thermal job (thermjob.db) must be in the same directory, which is the case when the user has quit the thermal job and saved everything.

Conversely, to transfer deflections and strains, while in ANSYS, with the thermal model in memory, and with the displacements and rotations from the structural analysis available, the user executes the macro with five arguments. The first is the name of the structural job enclosed between single quotes; the second (optional) is the time used to identify a particular structural solution. If no solution is available at the specified time, the solution at the nearest time is used. If time is not specified, the last solution in the results file is used by default. The third argument

is the insulation failure criterion, currently limited to a critical tensile normal strain in the longitudinal direction ε_{xx} at the steel-insulation interface. The fourth argument is the insulation thickness, and the fifth argument is the maximum number of insulation finite element layers. For example: *Geom_up, 'struct_job', 20, 0.05, 15, 3.*

C. Theory manual

Temperature transfer

In the thermal model, the temperature field is interpolated between corner nodes, linearly for Solid 70, and quadratically for Solid 87 and Solid 90. In the structural model and for Shell 181, temperatures are input as element body loads at the corners of the outside faces of the element and at the corners of the interfaces between layers, where, for the purpose of temperature results transfer, additional transfer nodes are created. The structural model nodes at the outside faces and the transfer nodes between layers are then mapped onto the thermal model, and temperatures at these locations and interpolated from temperatures at the nodes of the thermal model.

In the structural model and for Beam 188 or Beam 44, at each end node of the beam, temperatures are input in the same format as element body loads in the form of a mean temperature and two temperature gradients in the element Y and Z directions (X is the longitudinal beam direction). The actual input at each beam end takes the form of three temperatures at (x, 0, 0), (x, 1, 0) and (x, 0, 1), where x is either 0 or L (length of beam element). The location of the temperature transfer nodes depends on the cross section. A number of commonly used cross sections are supported by the newly developed interface macros (Figs. 1-7).

Solid circular section

Normally the beam nodes are located at the center of the section, however, this is not the case if the user defines a non zero offset. In addition to the section center, eight additional temperature transfer points are defined at ¾ R (where R is the radius of the section), equally spaced every π /4 radians (Fig. 1). The central temperature has a weight of one quarter of the cross section area, and the other temperatures have equal weights that account for the rest of the cross section. Gradients are averages of gradients between temperature pairs. In the following, T_i denotes the temperature at point i.

$$\textbf{\textit{Mean temperature}} = \frac{\boldsymbol{T}_5}{4} + \frac{3}{32}\left(\sum_1^4 \boldsymbol{T}_i + \sum_6^9 \boldsymbol{T}_i\right)$$

$$\textbf{\textit{Temperature gradient}}\ \boldsymbol{y} = \frac{2\,(\boldsymbol{T}_4 - \boldsymbol{T}_6) + 2\sqrt{2}\,\left(\boldsymbol{T}_1 - \boldsymbol{T}_3 + \boldsymbol{T}_7 - \boldsymbol{T}_9\right)}{9\,\boldsymbol{R}}$$

Circular tube

The transfer nodes are at mid-thickness and the temperature at the tube center no longer exists (Fig. 2).

$$\textbf{Mean temperature} = \frac{1}{8}\left(\sum_{1}^{4} T_i + \sum_{6}^{9} T_i\right)$$

$$\textbf{Temperature gradient } y = \frac{T_4 - T_6 + \sqrt{2}\left(T_1 - T_3 + T_7 - T_9\right)}{3\,(R_i + R_o)}$$

Solid rectangular section

Normally the beam nodes are located at the center of the section, however, this is not the case if the user defines a non zero offset. In addition to the section center, eight additional temperature transfer points are defined at the corners and midsides of an inscribed rectangle ¾ the linear dimensions of the section (Fig. 3). The central temperature has a weight of one quarter of the cross section area, the midside temperatures one eighth and the corner temperatures one sixteenth. Gradients are averages of gradients between temperature pairs. *H* denotes the section height.

$$\textbf{Mean temperature} = \frac{T_5}{4} + \frac{T_2 + T_4 + T_6 + T_8}{8} + \frac{T_1 + T_3 + T_7 + T_9}{16}$$

$$\textbf{Temperature gradient } z = \frac{(T_1 - T_7) + 2\,(T_2 - T_8) + (T_3 - T_9)}{3\,H}$$

Thin rectangular tube

A rectangular tube is considered thin if the wall thicknesses are less than or equal to one quarter of the external length of the perpendicular sides (Fig. 4). Most structural rectangular tubular sections fall in this category. The transfer nodes are at midthickness and the temperature at the tube center no longer exists. *A* denotes the total area and *B* the width of the cross section.

$$\textbf{Corner weight } w_1 = \frac{B\,t_4}{4} + \frac{H\,t_2}{4} - t_2\,t_4$$

$$\textbf{Midside weight } w_2 = \frac{B\,t_4}{2}$$

$$\textbf{Mean temperature} = \left(\sum w_i\,T_i\right)/A$$

$$\textbf{Temperature gradient } z = \frac{2}{2\,H - t_3 - t_4}\left(\frac{w_1\,T_1 + w_2\,T_2 + w_3\,T_3}{w_1 + w_2 + w_3} - \frac{w_7\,T_7 + w_8\,T_8 + w_9\,T_9}{w_7 + w_8 + w_9}\right)$$

I – section

For zero offset, the beam nodes are located at the bottom of the section at midwidth (point 14 in Fig. 5). Fifteen temperature transfer points are defined at the center of cells shown in Fig. 5. The web cells divide the web into three equal parts, whereas the flange cells have areas equal to one quarter of the flange area for the middle and one eighth for the corners. Temperatures at

transfer points are weighted by area as follows, where W_i and t_i denote section lengths and thicknesses:

$$w_1 = w_3 = w_4 = w_6 = \frac{w_2}{2} = \frac{w_5}{2} = \frac{W_2\ t_2}{8}$$

$$w_7 = w_8 = w_9 = \frac{W_4\ t_3}{3}$$

$$\textit{Mean temperature} = \left(\sum w_i\ T_i\right) / A$$

Temperature gradients are calculated from pairs of weighted temperatures.

$$\textit{Temperature gradient } z = \frac{T_1 + T_3 + T_4 + T_6 + 2\,(T_2 + T_5)}{4\,(W_3 + W_4)} - \frac{T_{10} + T_{12} + T_{13} + T_{15} + 2\,(T_{11} + T_{14})}{4\,(W_3 + W_4)}$$

$$\textit{Temperature gradient } y = \frac{2\,t_2\,(T_1 - T_3 + T_4 - T_6)}{3\,(W_1\ t_1 + W_2\ t_2)} + \frac{2\,t_1\,(T_{10} - T_{12} + T_{13} - T_{15})}{3\,(W_1\ t_1 + W_2\ t_2)}$$

T – section

Unless the user defines a non-zero offset, the beam end nodes are located at the center of the flange (Fig. 6). Twelve temperature transfer points are defined at the center of cells shown in Fig. 6. The web is divided into three equal cells, whereas the flange midside cells are twice the area of the flange corner cells. Temperatures at transfer points are weighted as follows:

$$w_1 = w_2 = w_3 = w_4 = w_5 = w_6 = \frac{W_3\ t_2}{6}$$

$$w_7 = w_9 = w_{10} = w_{12} = \frac{w_8}{2} = \frac{w_{11}}{2} = \frac{W_1\ t_1}{8}$$

$$\textit{Mean temperature} = \left(\sum w_i\ T_i\right) / A$$

Temperature gradients are calculated from pairs of temperatures:

$$T_{top} = \frac{T_1 + T_2}{2}$$

$$T_{bottom} = \frac{T_7 + T_9 + T_{10} + T_{12} + 2\,(T_8 + T_{11})}{8}$$

$$\textit{Temperature gradient } z = \frac{T_{top} - T_{bottom}}{W_2 - W_3 / 6 - t_1 / 2}$$

$$\textit{Temperature gradient } y = \frac{2\,(T_7 - T_9) + 2\,(T_{10} - T_{12})}{3\,W_1}$$

L – section (angle)

Unless the user defines a non-zero offset, the beam end nodes are located at the center of the intersection of the two legs. Sixteen temperature transfer points are defined at the center of cells shown in Fig. 7. Each leg is divided into six equal cells, and the intersection into four equal cells. Temperatures at transfer points are weighted as follows:

$$w_1 = w_2 = w_3 = w_4 = w_5 = w_6 = \frac{W_4\ t_2}{6}$$

$$w_7 = w_8 = w_9 = w_{12} = w_{13} = w_{14} = \frac{W_3\ t_1}{6}$$

$$w_{10} = w_{11} = w_{15} = w_{16} = \frac{t_1\ t_2}{4}$$

$$\textit{Mean temperature} = \left(\sum w_i\ T_i\right) / A$$ where

Temperature gradients are calculated from pairs of temperatures:

$$T_{top} = \frac{T_1 + T_2}{2}$$

$$T_{bottom} = \frac{1}{W_1 t_1}\left(\sum_{7}^{16} w_i T_i\right)$$

$$\textit{Temperature gradient } z = \frac{T_{top} - T_{bottom}}{5\,W_4/6 + t_1/2}$$

$$T_{right} = \frac{T_7 + T_{12}}{2}$$

$$T_{left} = \frac{1}{W_2\ t_2}\left(\sum_{1}^{6} w_i T_i + \sum_{10}^{11} w_i T_i + \sum_{15}^{16} w_i T_i\right)$$

$$\textit{Temperature gradient } y = \frac{T_{right} - T_{left}}{5\,W_3/6 + t_2/2}$$

Shell

The quadrilateral shell (181) with multiple layers is supported. The same number of layers has to be used for all sections, although the section and layer thickness can vary. Temperature transfer nodes are located at the corners of all layers, including the top and bottom surfaces.

User-defined quadrilateral section (MESH)

Support for a user-defined beam section, called MESH section, is also provided. When building models using these sections, one should follow standard rules and guidelines (User's Manual ANSYS 10.0, 2005), with the only added condition that the model should have all areas

MESHed grouped into components named after the section. The user-defined section formulation uses section cell centers and cell areas for thermal calculations. As discussed above, area averaging is used for the beam nodal temperature and thermal gradient. The user controls the accuracy of the calculations by the number of cells and their distribution inside the section. A significant additional capability is that the user-defined section may have multiple materials.

Deflection transfer

Solid element nodes from the thermal model are first mapped onto the undeformed structural model. Displacements $\boldsymbol{u'}$ at the mapped nodes are calculated from structural displacements $\boldsymbol{u}$ and rotations $\boldsymbol{r}$ from the nearest beam or shell nodes by the kinematic vector equation (in bold), where $\boldsymbol{d}$ is the distance between the mapped node and the undeformed structural node:

$$\boldsymbol{u'} = \boldsymbol{u} + \boldsymbol{r} \times \boldsymbol{d}$$

Strain transfer

Normal strain ε_{xx} (x is the beam longitudinal direction) is read at the beam element ends at a number of points on the perimeter of the cross section, typically the corners. The strains are read from the structural beam model and mapped onto the thermal solid model, where they fall on the interface between steel and insulation. Where the strain (linearly interpolated if necessary, according to the shape function of the beam element) at the interface reaches or exceeds a user-defined positive (tension) threshold, the insulation is assumed to fail. If the insulation model consists of several layers of finite elements, all layers outside the location of critical interfacial strain also fail. Failure propagation is outward, normal to the face touching steel. The failed insulation is removed or its properties degraded according to user input. If appropriate, the user may choose to update the thermal analysis based on the degraded insulation. For user-defined sections, the deflection and strain transfer macro is currently limited to quadrilaterals with a 4x4 mesh. The macro does not currently support shell elements, because its primary purpose is to calculate insulation strain and damage, and shell elements are most often used to model uninsulated floor slabs.

D. Test cases

Each of the cross sections implemented was tested. In addition, a slightly more complicated example of a floor slab supported by an open web truss was tested. Figs. 8 and 9 show the structural model, and Figs. 10 and 11 the thermal one. The truss is made of three different sections modeled with Beam188, and the floor slab is modeled with three-layered Shell 181 elements. The thermal model uses Solid 70 elements and Link 32 elements to tie together the various members at the corners for thermal conduction. Insulation is present in the thermal model, but not in the structural model.

The lightweight concrete slab has dimensions 5.080 m × 1.016 m × 0.1105 m and each triangular panel of the steel truss is 1.016 m (span) × 0.762 m (depth). The bottom chord is an inverted T-section with dimensions 51 mm (flange width) × 38 mm (overall depth) × 8 mm (thickness). The top chord is also a T-section with dimensions 76 mm (flange width) × 51 mm (overall depth) × 8 mm (thickness), and the open web consists of bars 28 mm in diameter. Steel

and concrete are elastic, have a Poisson's ratio of 0.3 and 0.25, a density of 7850 kg/m^3 and 1600 kg/m^3, specific heat of 600 J/(kg•°C) and 840 J/(kg•°C) and conductivity of 45 W/(m•°C) and 0.75 W/(m•°C) respectively. Table 1 shows the variation of the modulus of elasticity of steel and concrete with temperature. The parts of the steel truss not in contact with the concrete slab are covered with 15 mm insulation of density of 290 kg/m^3, specific heat of 800 J/(kg•°C) and conductivity of 0.12 W/(m•°C).

Table 1 Variation of the modulus of elasticity of steel E_s and concrete E_c with temperature

T °C	30	150	450	500	550	650	700	800	950	1000
E_s GPa	206		173		161		136	115		61.8
E_c GPa	14.4	14.4		5.23		1.31			0.186	

A thermal transient solution resulting from a floor fire is produced by the solid model. A thermal flux of 10 kW/m^2 is applied to the bottom surface of the lower chord and concrete slab, except where it is in contact with the top chord (Fig. 12), while a lower flux of 5 kW/m^2 is applied to the other surfaces, except the top of the slab, where a convection boundary with a film coefficient of 25 W/(m^2• °C) applies.

Fig. 13 shows the temperature histories for insulation and structural materials for various locations at midspan and midwidth: bottom of concrete slab, bottom of lower steel chord, lowest layer of insulation, and a point closest to midspan on the diagonal. Figs. 14 and 15 show the temperature contours for steel and concrete at the end of the load plateau of 1800 seconds. The temperature transfer macro *temp2body_ld.mac* is invoked after the thermal analysis is completed. Figs. 16 and 17 show the temperature body loads as transferred by the macro for the full model and the slab respectively.

In addition to the thermal body loads shown in Fig. 16, the truss dead weight is activated along with symmetrical boundary condition along the long edges of the concrete slab and simple supports where the truss meets the slab ends. Large deflection solution of the model results in deflections shown in Figs. 18 to 20. The deflection transfer macro, *geom_up.mac* is invoked after resuming the thermal model and the resulting updated thermal model is shown in Figs. 21 to 23. The transfer of temperatures and deflection is satisfactory, as assessed by visual inspection. Accuracy depends on the meshes used in the two models, and the thermal loads.

E. Conclusion

This document presents a new, user-friendly program called *GetGo* that complements existing ANSYS software. The Macros allow the transfer of temperature results from a thermal analysis modeled with solid elements to a structural analysis modeled with beams and shells. The macros also allow the reverse, namely the geometric updating of the thermal model with deflections and strains obtained from the structural analysis. This last step is particularly useful in intense fires of long duration, where significant deflections could cause damage to insulation and displace the structure to a different thermal regime.

References

NIST NCSTAR 1 (2005), "Final Report on the Collapse of the World Trade Center Towers," National Construction Safety Team for the Federal Building and Fire Safety Investigation of the World Trade Center Disaster, National Institute of Standards and Technology, Gaithersburg, MD., September 2005.

User's Manual ANSYS 10.0 (2005), SAS IP Inc., Southpointe, 275 Technology Dr. Canonsburg, PA 15317

Duthinh, D., McGrattan, K. and Khaskia, A.: "Recent Advances in Fire-Structure Analysis," accepted for publication in Fire Safety Journal, Jun. 2007.

Duthinh, D. McGrattan, K., and Abed Khaskia: "Recent Advances in Fire-Structure Analysis," 39th Joint Meeting of the U.S./Japan Natural Resources Development Program (UJNR) Panel on Wind and Seismic Effects, Tsukuba, Japan, 2007.

Duthinh, D. McGrattan, K. and Khaskia, A.: "Fire-Structure Interaction: New Perspectives," NIST Fire Conference, Safety of Threatened Buildings, April 2007

Duthinh, D. and Khaskia, A.M.: "Two-way Interface between Thermal Solid Elements and Structural Beam and Shell Elements *(GetGo)*," Int. ANSYS Conf., Pittsburgh, Pa, May 2-4, 2006.

Acknowledgment

This work is part of the NIST Competence Project on Failure of Complex Systems, led by Emil Simiu.

Disclaimer

Certain trade names or company products are mentioned in the text to specify adequately the software used. In no case does such identification imply recommendation or endorsement by the National Institute of Standards and Technology, nor does it imply that the software is the best available for the purpose. Questions should be addressed to Dat Duthinh, 301 975 4357, dduthinh@nist.gov.

Figures

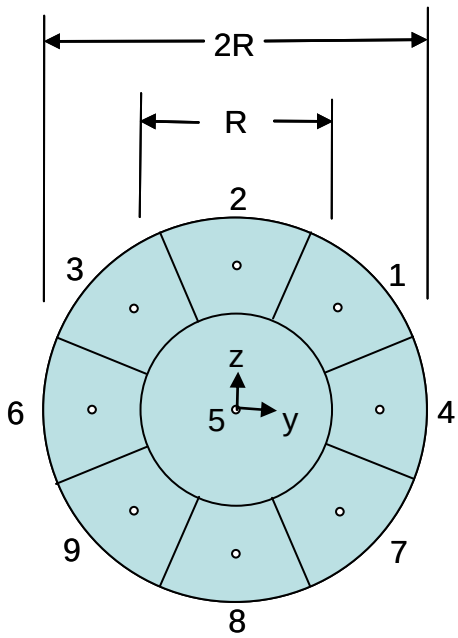

Fig. 1 Solid circular section

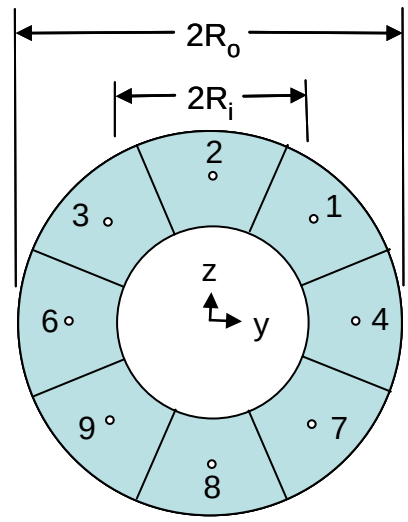

Fig. 2 Circular tubular section

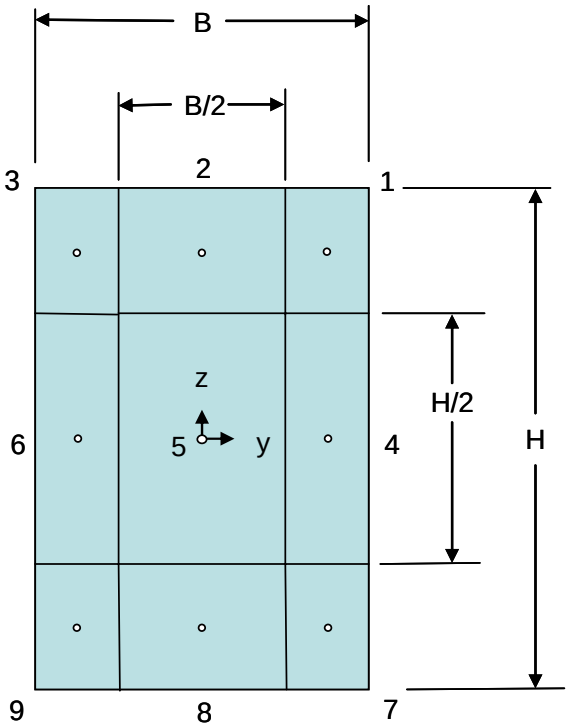

Fig. 3 Solid rectangular section

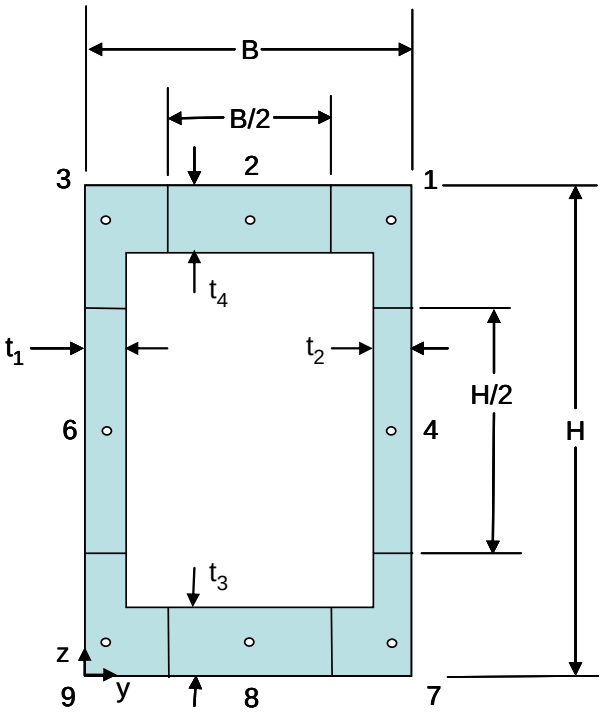

Fig. 4 Rectangular tubular section

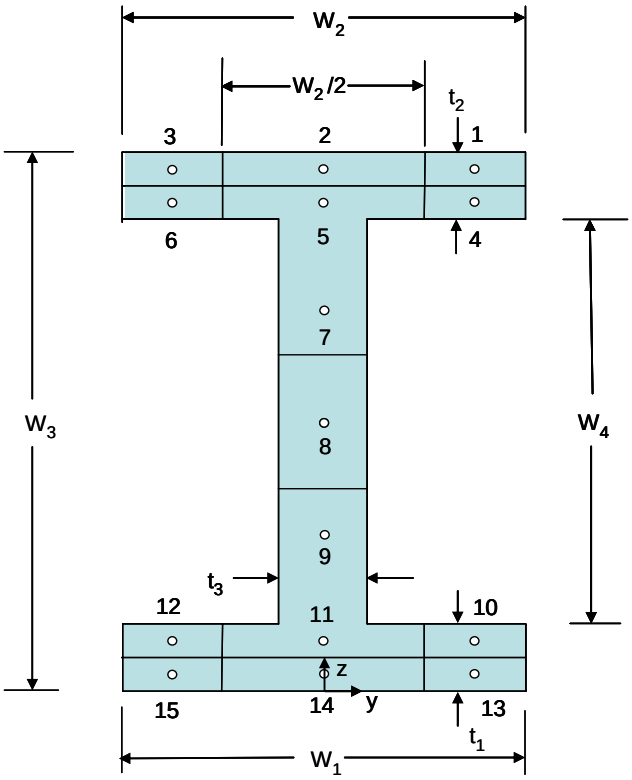

Fig. 5 I – section

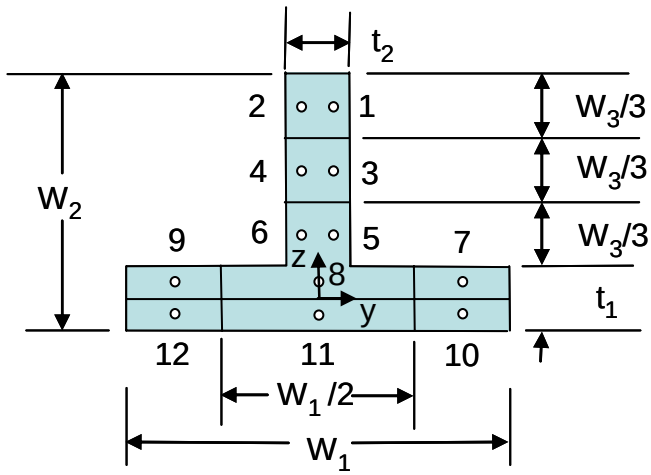

Fig. 6 T-section

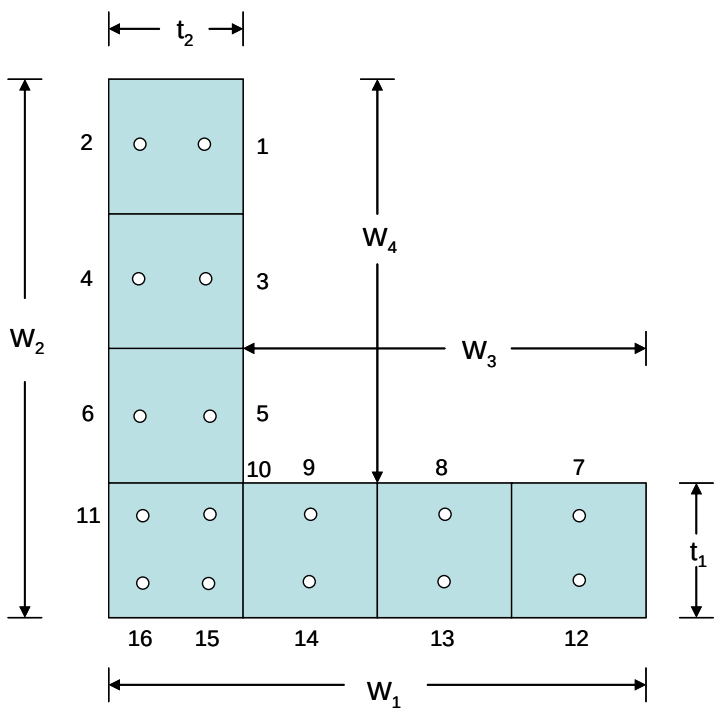

Fig. 7 L-(angle) section

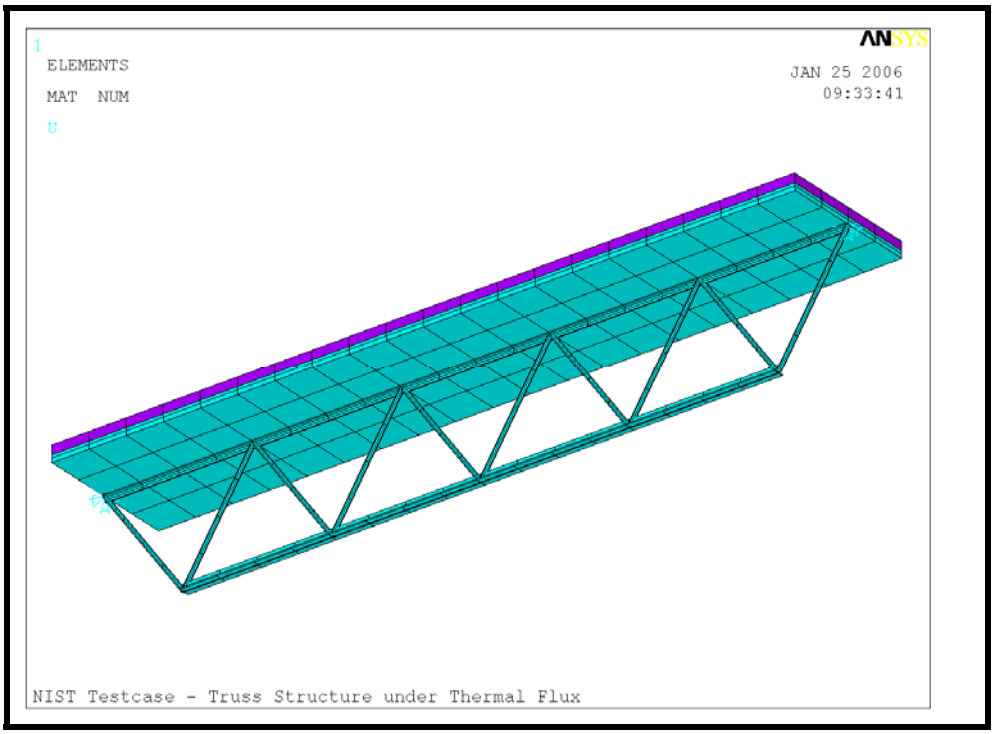

Fig. 8 Structural model (beams and layered shells)

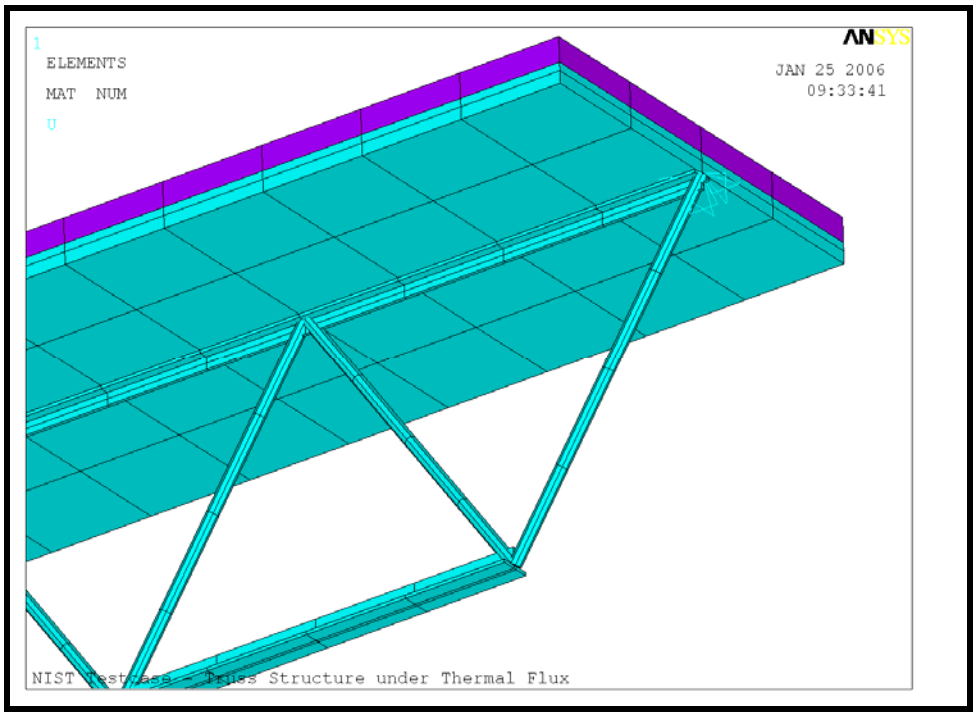

Fig. 9 Detail of structural model

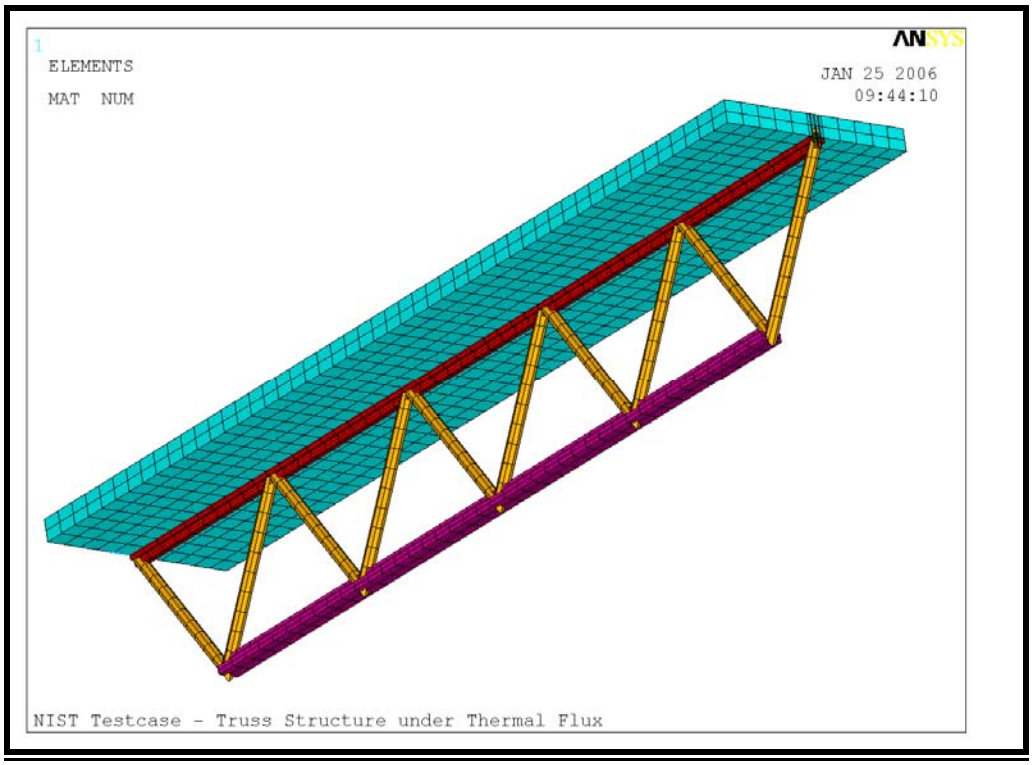

Fig. 10 Thermal model (solid elements)

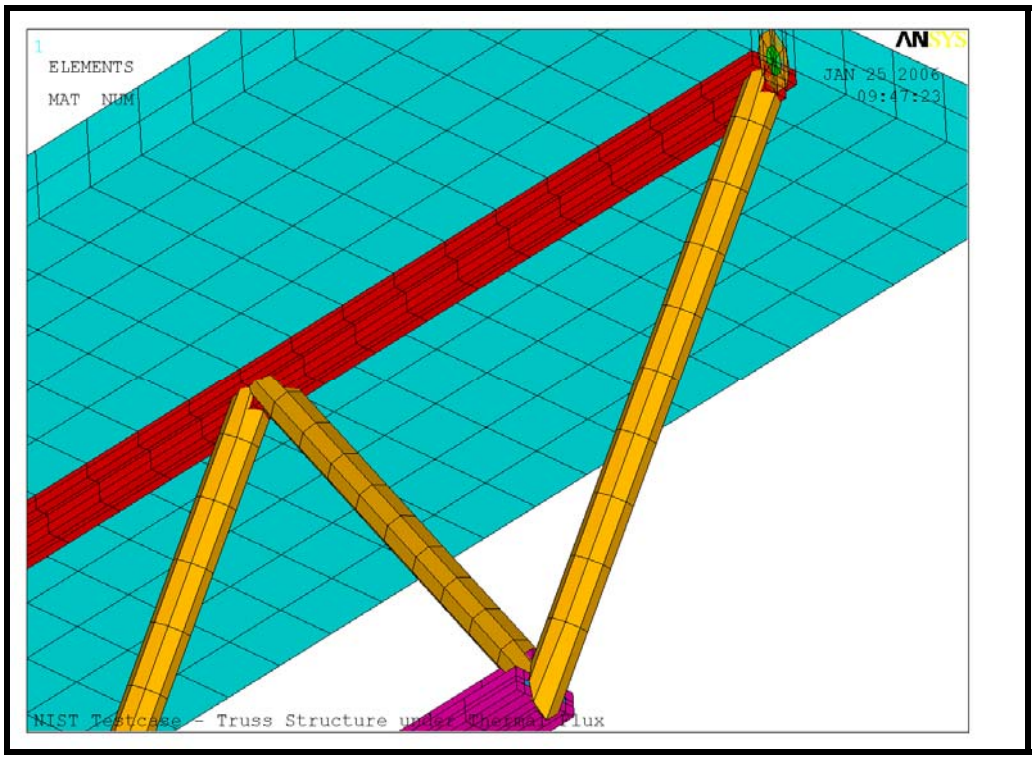

Fig. 11 Detail of thermal model showing insulation

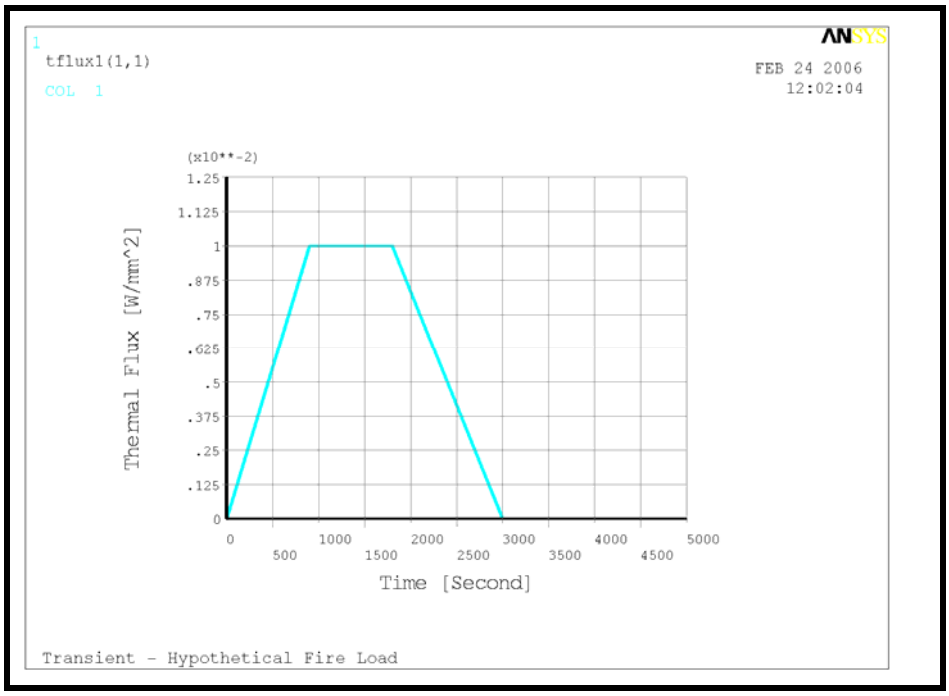

Fig. 12 Thermal flux applied to chords and bottom of slab

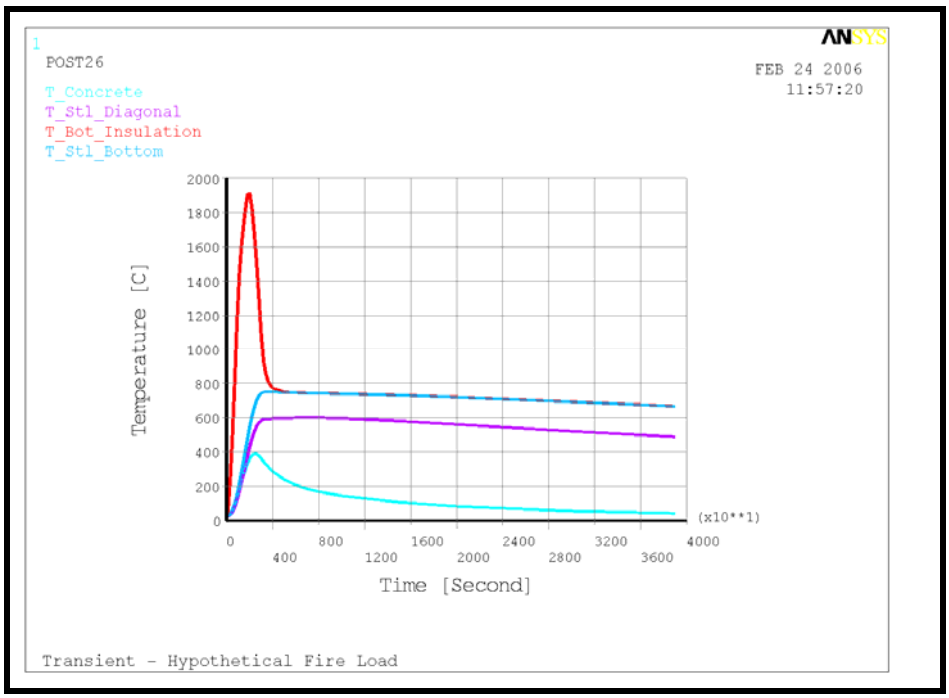

Fig. 13 Temperature histories

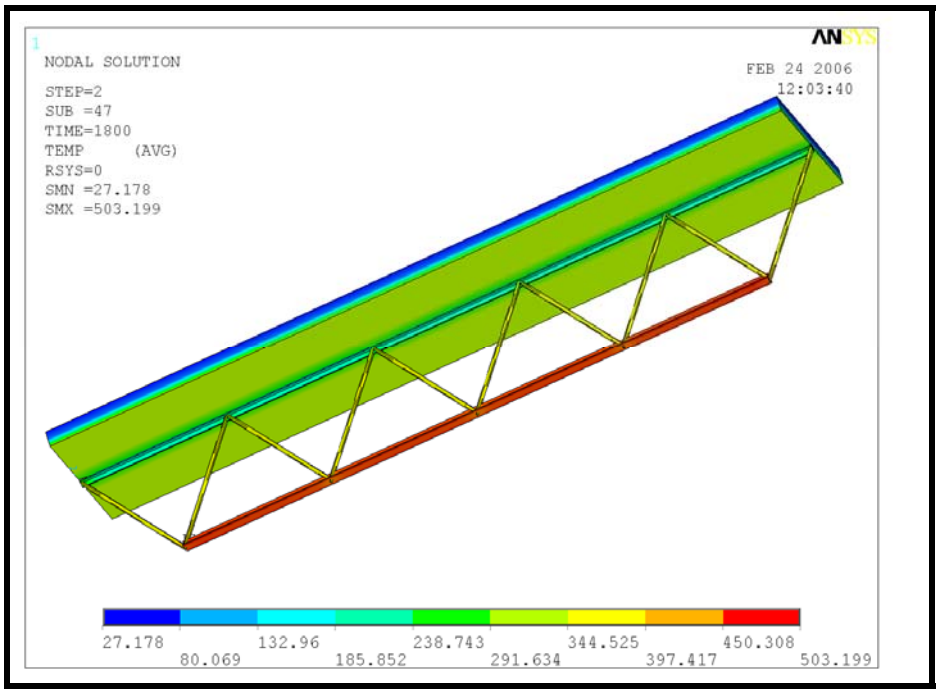

Fig. 14 Temperature results from thermal model, shown without insulation

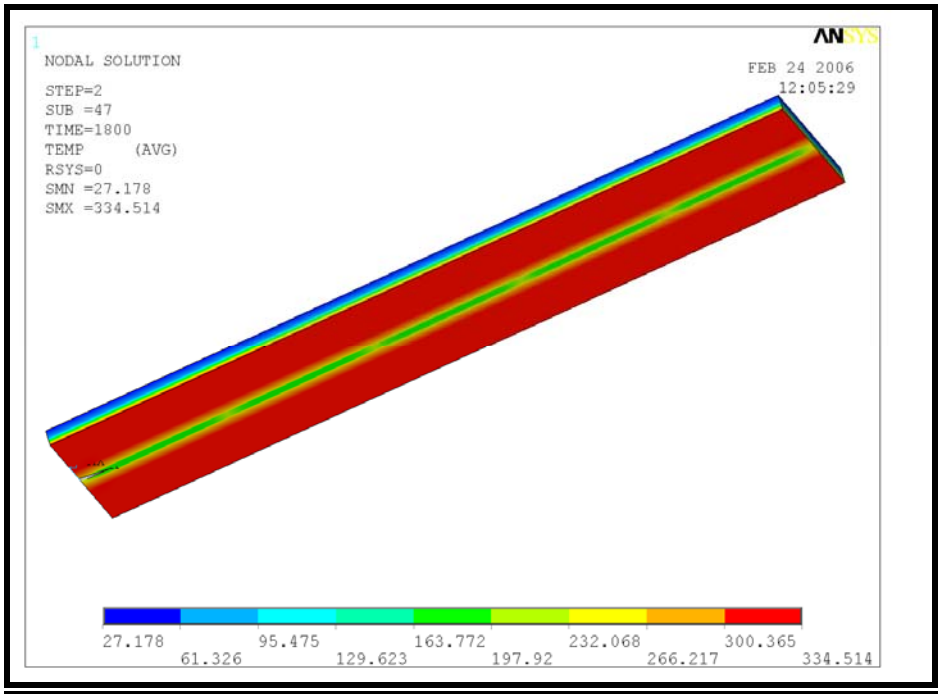

Fig. 15 Temperature results from thermal model, slab only

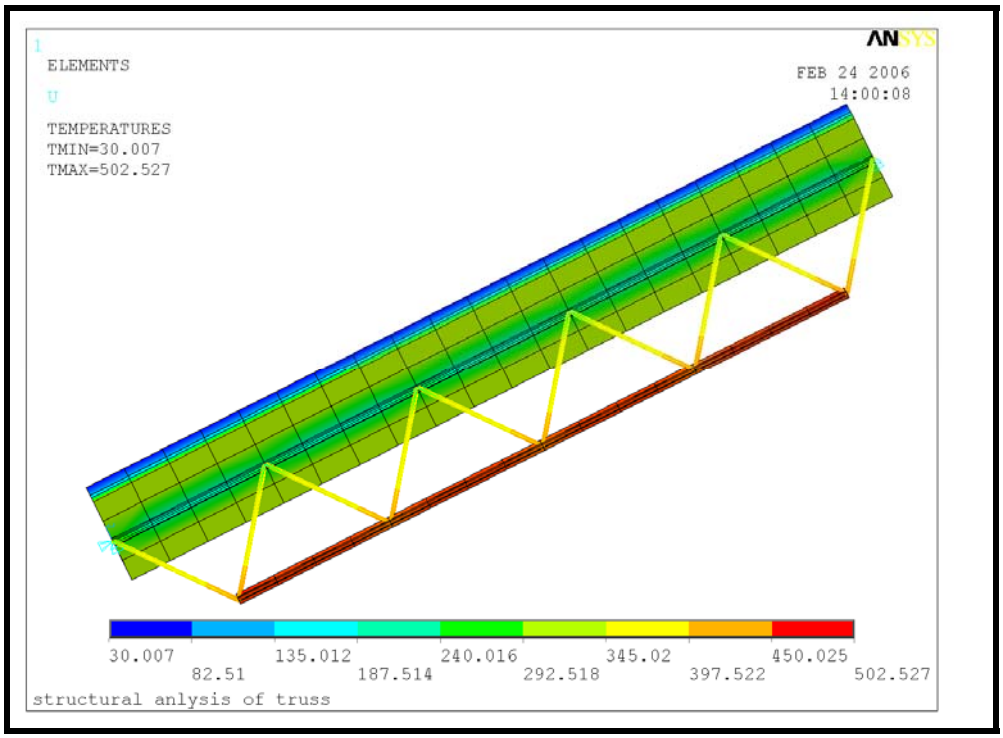

Figure 16 Structural model – temperatures input as body loads

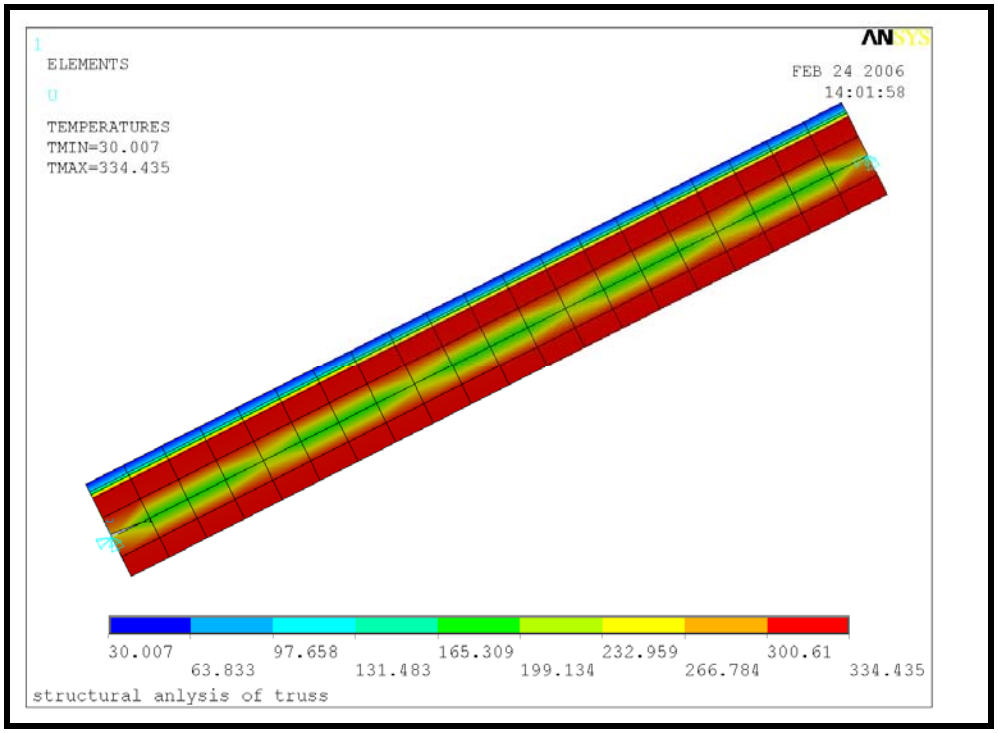

Figure 17 Structural model – slab temperatures input as body loads

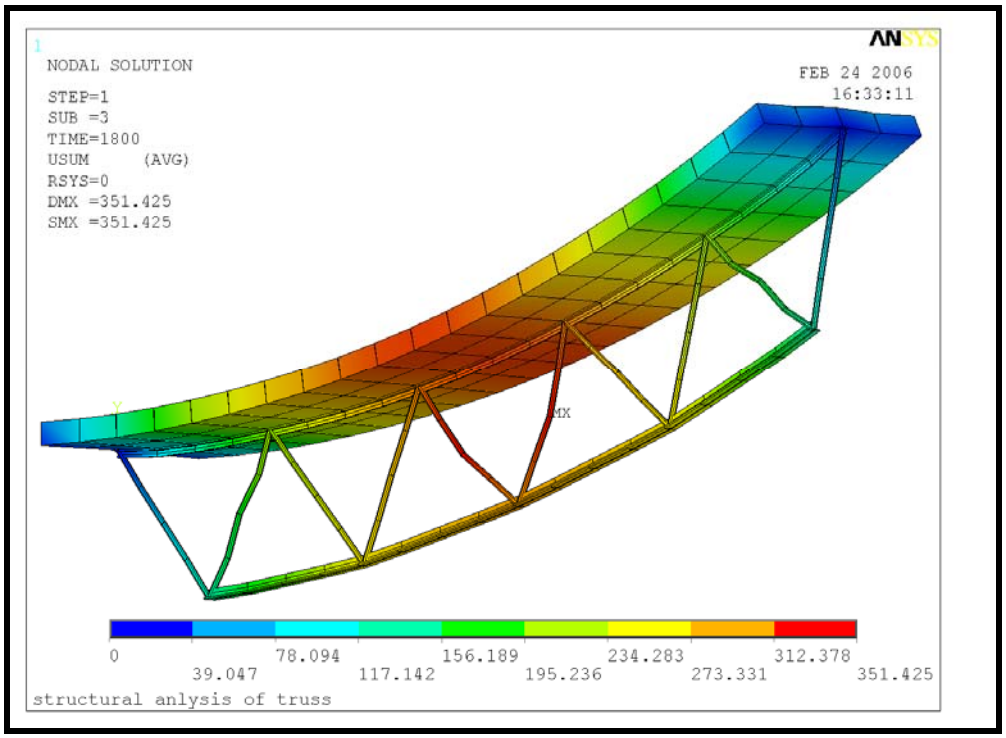

Figure 18 Structural model – deflections under thermal loads and dead weight

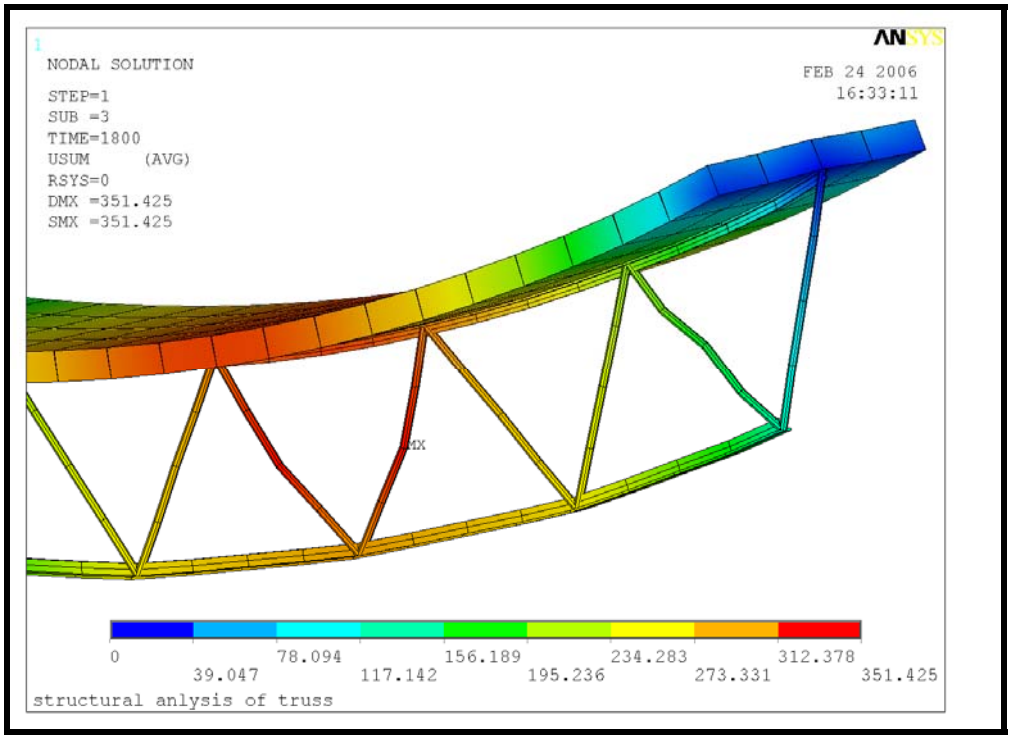

Figure 19 Structural model – details of deflections under thermal loads and dead weight

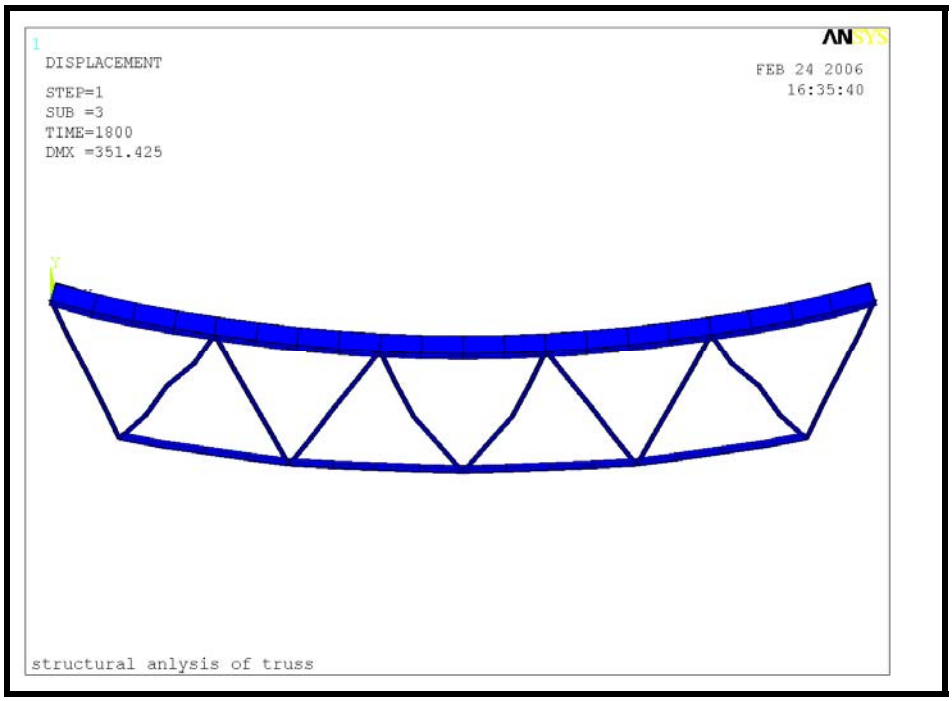

Figure 20 Structural model – side view of deflections under thermal loads and dead weight

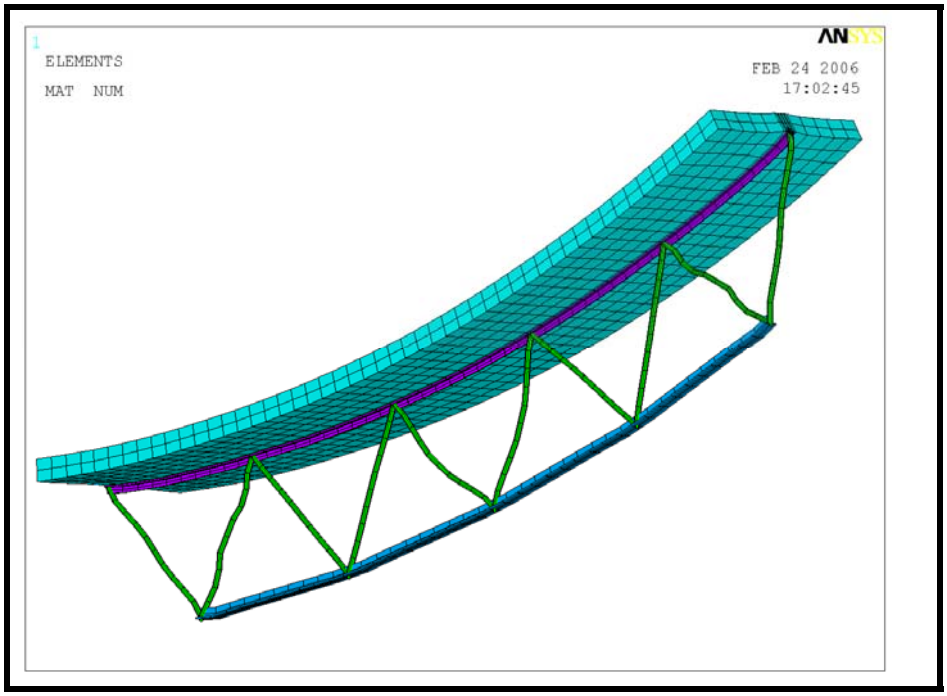

Figure 21 Thermal model – updated geometry based on structural deflections

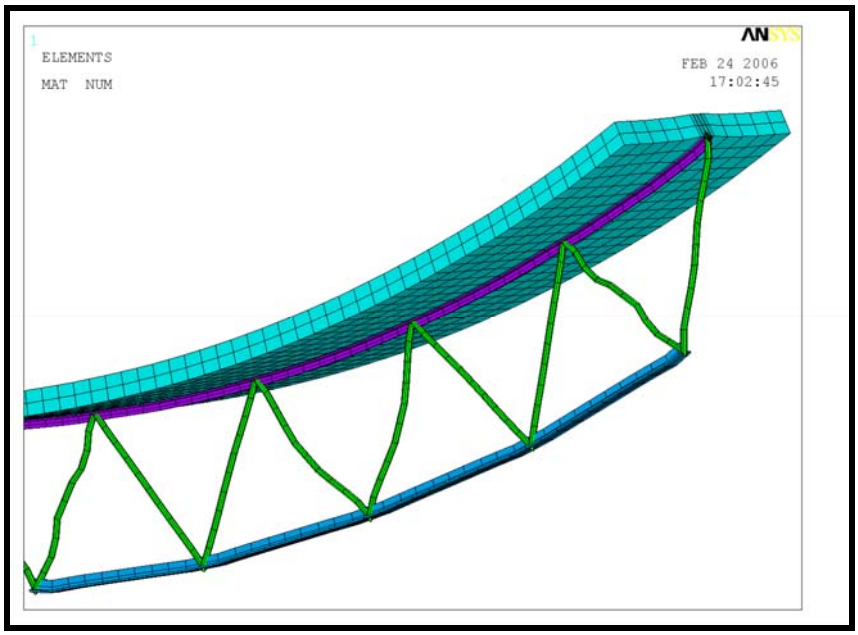

Figure 22 Thermal model – details of updated geometry based on structural deflections

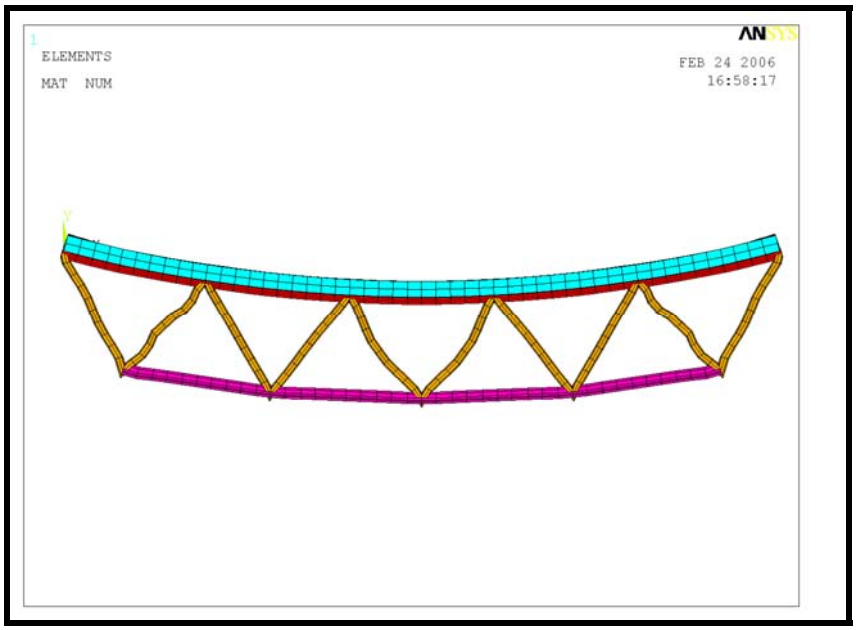

Figure 23 Thermal model with insulation – updated geometry based on structural deflections

Appendix 1

Macros Page

Temp2body_ld transfers temperature results from thermal to structural…….. 23

S_RECT solid rectangular beam section…….. 33

S_HRECT rectangular tubular beam section……... 39

S_CSOL solid circular beam section…… 45

S_CTUB circular tubular beam section……51

S_T T- beam section…… 57

S_I I- beam section…….. 63

S_L L-(angle) beam section…….. 69

S_SHELL shell elements (for slabs) …….. 75

S_MESH user-defined beam section…… 78

Geom_up transfers strains. deflections from structural to thermal and checks insulation 83

F_RECT solid rectangular beam section……..... 89

F_HRECT rectangular tubular beam section……..…..101

F_CSOL solid circular beam section…….……103

F_CTUB circular tubular beam section…… 106

F_T T- beam section…… 109

F_I I- beam section…….. 112

F_L L-(angle) beam section……. 115

F_MESH user-defined beam section…… 118

Example input file: THERMAL2STRUCTURAL ……..…….….……121

Example input file: STRUCTURAL2THERMAL ……..……...……126