Author's personal copy

Fire Safety Journal 45 (2010) 35–43

Contents lists available at ScienceDirect

Fire Safety Journal

journal homepage: www.elsevier.com/locate/firesaf

Quantifying the vulnerabilities of ceramic tile roofing assemblies to ignition during a firebrand attack

Samuel L. Manzello [a,*], Yoshihiko Hayashi [b], Takefumi Yoneki [c], Yu Yamamoto [c]

[a] Fire Research Division, Building and Fire Research Laboratory (BFRL), National Institute of Standards and Technology (NIST), Gaithersburg, MD 20899-8662, USA
[b] Department of Fire Engineering, Building Research Institute (BRI), Tachihara 1, Tsukuba, Ibaraki 0305-802, Japan
[c] Tokyo Fire Department, Otemachi 1-3-5, Chiyoda, Tokyo 100-8119, Japan

ARTICLE INFO

Article history:
Received 18 March 2009
Received in revised form
14 September 2009
Accepted 16 September 2009

Keywords:
Wildland-Urban Interface (WUI) fires
Ignition
Firebrands
Roofing

ABSTRACT

An experimental campaign was conducted to investigate the vulnerabilities of ceramic tile roofing assemblies to ignition under a controlled firebrand attack using the NIST firebrand generator. The results of a parametric study on the ignition propensity of ceramic tile roofing assemblies under a firebrand attack using the firebrand generator installed inside the Fire Research Wind Tunnel Facility (FRWTF) at the Building Research Institute in Tsukuba, Japan is presented. Over the range of parameters considered, ceramic tile roofing assemblies were found to be vulnerable to ignition during a firebrand attack.

Published by Elsevier Ltd.

1. Introduction

Structure ignition in the Wildland-Urban Interface (WUI) is a significant international problem with major WUI fires reported in Australia, Greece, Portugal, Spain, and the USA. In the USA, there have been three significant WUI fires within the past six years in California. Of these, the 2003 Cedar fire resulted in $2B in insured losses and destroyed more than three thousand homes. The recent destructive WUI fires that occurred in Southern California in 2007 displaced nearly 300,000 people, destroyed over a thousand structures, and resulted in $1B paid by insurers in 2007 alone [1]. The recent fires in Victoria, Australia in 2009 have resulted in over 150 deaths and more than three thousand structures destroyed.

Post-fire damage evidence suggests that firebrands are a major cause of structural ignition in Wildland-Urban Interface (WUI) fires in USA and Australia [2,3]. Japan has been plagued by structural ignition from firebrands. The initial fire outbreak mechanism is different since WUI fires are not prevalent in Japan. Japan is subjected to many earthquakes due to its geographical location. After these earthquakes have occurred, many fires result. Firebrands are produced as structures burn and with the presence of high winds these firebrands are dispersed throughout the atmosphere and produce spot fires, which result in severe urban fires that are difficult to extinguish.

Without physical knowledge regarding how firebrands ignite structures in WUI as well as urban fires, it is impossible to develop risk assessment and mitigation tools intended to reduce structure losses in these fires. Specifically, building codes and standards are needed to guide construction of new structures in areas known to be prone to these fires in order to reduce the risk of structural ignition in the event of a firebrand attack. For these standards to be relevant, a thorough scientific methodology must be developed to understand the types of materials (e.g. roofing and siding materials) that can be ignited by firebrands as well as vulnerable points on a structure where firebrands may easily enter (e.g. building vents).

It is difficult to develop measurement methods to replicate a firebrand attack on structures that occur in actual WUI fires. Entirely new experimental approaches are required to address this problem. Past firebrand studies, be they experimental or numerical, have focused on understanding how far firebrands fly (spotting distance); these studies do not assess the vulnerabilities of structures to ignition from firebrand attack [4–15]. In particular, the capability to generate and engineer specific firebrand size and mass distributions (based on distributions measured from burning vegetation and structures) and direct this firebrand flux towards full-scale components of structures is required. Furthermore, the generation of firebrand flux must be done in a full-scale wind tunnel facility designed to conduct fire tests since wind plays a key role in WUI and urban fire spread.

In order to do this, a unique experimental apparatus, known as the NIST firebrand generator, has been constructed to generate a controlled and repeatable size and mass distribution of glowing

* Corresponding author. Tel.: +1 301 975 6891; fax: +1 301 975 4052.
E-mail address: samuelm@nist.gov (S.L. Manzello).

0379-7112/$ - see front matter Published by Elsevier Ltd.
doi:10.1016/j.firesaf.2009.09.002

Author's personal copy

firebrands. Since wind plays a critical role in the spread of WUI fires in the USA and urban fires in Japan, NIST has established collaboration with the Building Research Institute (BRI) in Japan. BRI maintains one of the only full-scale wind tunnel facilities in the world designed specifically for fire experimentation; the Fire Research Wind Tunnel Facility (FRWTF). The coupling of the NIST firebrand generator and BRI's FRWTF is leading to progress in accessing vulnerabilities of structures to a firebrand attack. A brief summary of key results to date are delineated below.

The firebrand generator has been used to study the penetration of firebrands into building vents [16]. The WUI California Building Standards intended to mitigate firebrand penetration through building vents by recommending a screen size of 6 mm motivated that study but this screen size was not based on scientific testing [17]. A structure was installed inside the FRWTF and a gable vent was installed on the front face of the structure and three different steel screens were installed behind a gable vent to ascertain the ability of the screen to block firebrands from penetrating into the structure. Behind the screens, shredded paper of fixed moisture content was placed in pans to observe if the firebrands that penetrated the vent and subsequent screen were able to produce an ignition event. Firebrands were blown through the vent and were pressed against the steel screen. The firebrands were not quenched by the presence of the screen and would continue to burn until they were small enough to fit through the screen opening. For all screen sizes tested, the firebrands were observed to penetrate the screen and produce a self-sustaining smoldering ignition inside the paper beds installed inside the structure. For the 6 mm screens tested, a majority of the firebrands simply flew through the screen, resulting in more rapid ignition of the paper behind the screen than that observed for the smaller screen sizes of 3 and 1.5 mm.

The firebrand generator was then used to investigate the vulnerability of full-scale sections of asphalt roofing assemblies (base layer material, tar paper, and shingles) as well as only the base layer roofing material, such as oriented strand board (OSB) [18]. In those experiments, a custom mounting assembly allowed for the construction of flat roof subsections as well as the construction of valleys (angled) roofs. For ignition testing of base layer roofing materials only (bare OSB), at an angle of 60°, the firebrands were observed to collect inside the channel of the OSB crevice. The firebrands that collected in the crevice produced smoldering ignition where they landed, eventually resulting in several holes in the OSB. The OSB continued to smolder intensely near the locations where the firebrands landed. Eventually, a transition to flaming ignition was observed on the back side of the OSB. As the angle was increased to 90°, similar behavior was observed where the firebrands that collected initiated intense smoldering. Eventually, holes were formed at these locations in an identical manner to the 60°. While smoldering ignition was observed, it was not possible for a transition to flaming to occur. As the angle was increased to 135°, ignition was no longer possible. It is important to realize that bare OSB is not used as the surface material in roofing but roofs in a state of ill repair may easily have base layer materials such as OSB exposed to the elements.

When asphalt shingles were applied (OSB, tar paper, and asphalt shingles), at 60° and 90°, several firebrands were observed to become trapped along the channel of two sections and along the seams of the shingles. However, no ignition events were observed on the shingles; the firebrands were only capable of melting the asphalt shingles. As the angle was spread further, fewer firebrands were observed to become trapped in the seam of the two sections, in similar manner to base layer OSB tests described above. While these tests did not consider the influence of aged shingles or pre-heated shingles, the results indicated that firebrands can melt asphalt shingles. Once the firebrands penetrate the shingles, the base layer (OSB) was found to be ignited rather easily [18].

The current study is concerned with investigating the ignition of curved ceramic tile roofing assemblies (so-called Spanish tile roofing) to a controlled firebrand attack using the firebrand generator. Current standards exist to test ignition of roofing decks to firebrands (e.g. ASTM E108 [19]) by placing a burning wood crib on top of a section of a roof assembly under an air flow. The dynamic process of multiple firebrands landing under ceramic tiles/gaps as a function of time is not taken into account. Mitchell and Patashnik [2] investigated the 2003 Cedar fire and reported a possible correlation between homes that were ignited and those homes fitted with curved ceramic tile roofing (Spanish tile roofing). Unfortunately, to date, there has been no quantitative testing conducted anywhere to address these issues.

To this end, a parametric study on the ignition propensity of curved ceramic tile roofing assemblies under a firebrand attack using the firebrand generator installed inside the Fire Research Wind Tunnel Facility (FRWTF) at BRI was conducted. To investigate the influence of an applied wind field, the experiments were conducted using BRI's FRWTF. This paper greatly expands upon a recent conference publication that was presented regarding vulnerabilities of ceramic tile roofing assembles to ignition under a controlled firebrand attack using the NIST firebrand generator [20].

2. Experimental description

Fig. 1a is a drawing of the NIST firebrand generator. A picture of device is shown in Fig. 1b. A brief description of the device is provided here for completeness and follows prior descriptions very closely [16,18]. This version of the device was scaled up from a first-generation, proof-of-concept firebrand generator [21]. The bottom panel displays the procedure for loading the Norway Spruce (*picea abies Karst)* tree mulch into the apparatus. Norway Spruce (*picea abies Karst)* was chosen since it belongs to the *Pinaceae* family, which includes such species as Ponderosa pine (*Pinus Ponderosa)* and Douglas-Fir *(Pseudotsuga menziesii)*; common conifer species dominant in the USA. Fig. 2a displays a picture of the trees used to produce mulch. The mulch was produced from 6.0 m Norway Spruce trees. In addition, Norwegian Spruce is found in more than 20 states in the USA. These trees were used as a source for mulch for the firebrand generator since they were quite easy to locate in Japan.

The mulch pieces were deposited into the firebrand generator by removing the top portion. The mulch pieces were supported using a stainless steel mesh screen (0.35 cm spacing), which was carefully selected. Two different screens were used to filter the mulch pieces prior to loading into the firebrand generator. The first screen blocked all mulch pieces larger than 25 mm in diameter. A second screen was then used to remove all needles from the mulch pieces. The justification for this filtering methodology is provided below. A difference in these tests, as compared to prior work using the firebrand generator, was the mulch loading that was varied from 2.1 to 2.8 kg. The maximum mulch loading possible with the current firebrand generator design is 2.8 kg. Fig. 2b displays a picture of sorted mulch that was poured into the firebrand generator. The firebrand generator was driven by a 1.5 kW blower that was powered by a gasoline electrical generator. The gasoline electric generator provided the blower with the necessary power requirements (see Fig. 1a). These power requirements were not available at the FRWTF, necessitating the use of a portable power source.

Author's personal copy

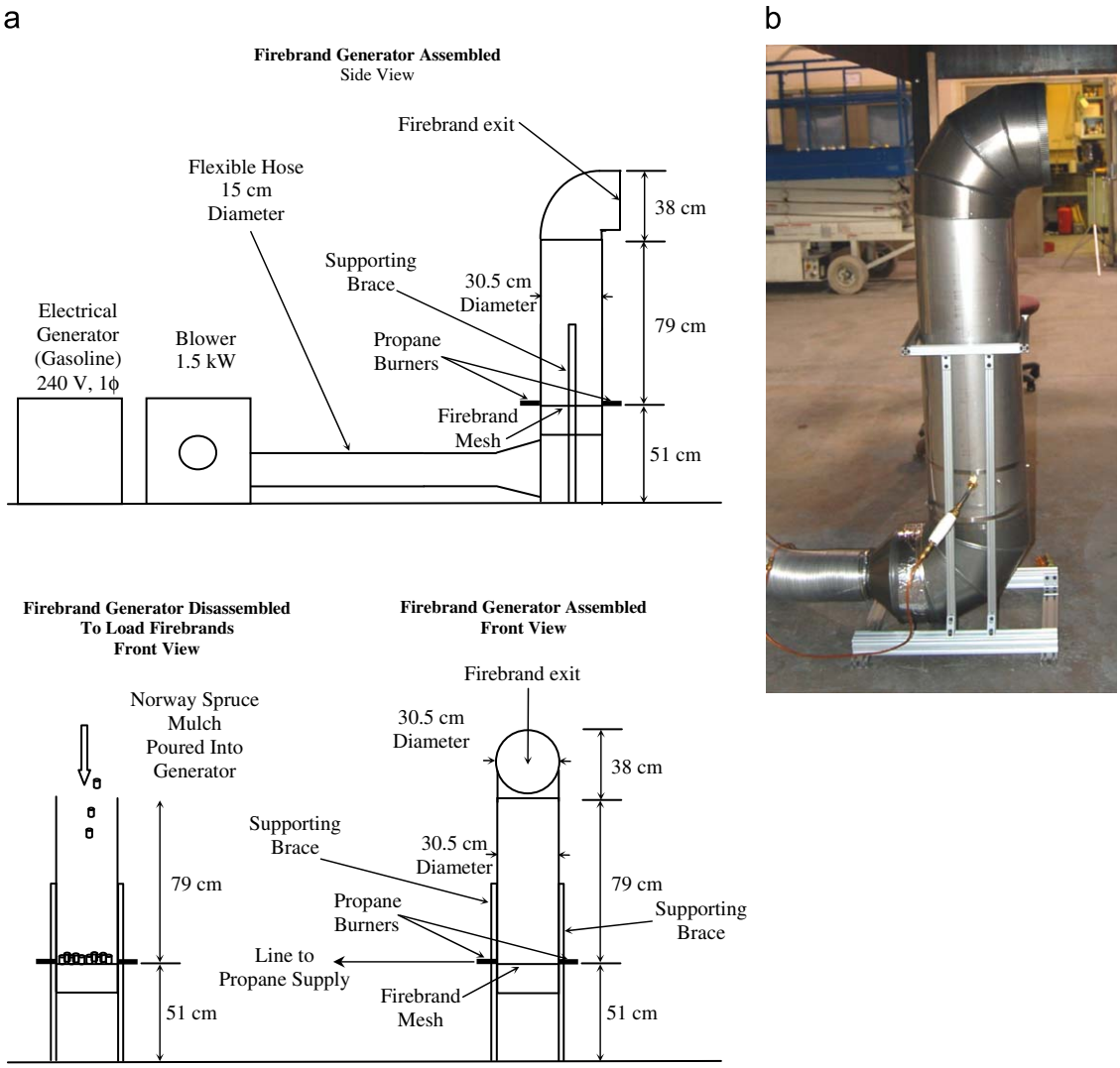

Fig. 1. (a) Schematic of firebrand generator—top panel shows the device fully constructed while the bottom panel displays the procedure for loading the device. (b) Digital picture of the firebrand generator.

After the Norway Spruce tree mulch was loaded, the top section of the firebrand generator was coupled to the main body of the apparatus. With the exception of the flexible hose, all components of the apparatus were constructed from either galvanized steel or stainless steel (0.8 mm in thickness). The blower was then switched to provide a low flow for ignition (1.0 m/s flow inside the duct measured upstream of the wood pieces). The two propane burners were then ignited individually and simultaneously inserted into the side of the generator. Each burner was connected to a 0.635 cm diameter copper tube with the propane regulator pressure set to 344 kPa at the burner inlet. This configuration allowed for a 1.3 cm flame length from each burner. The Norway Spruce mulch was ignited for a total time of 45 sec. After 45 sec of ignition, the fan speed of the blower was increased (2.0 m/s flow inside the duct measured upstream of the wood pieces). This sequence of events was selected in order to generate a continuous flow of glowing firebrands for approximately six minutes duration.

The firebrand generator was installed inside the test section of the FRWTF at BRI. Fig. 3 displays a layout of the facility. The facility was equipped with a 4.0 m fan used to produce the wind field and was capable of producing up to a 10 m/s wind flow. The wind flow velocity distribution was verified using a hot wire anemometer array. To track the evolution of the size and mass distribution of firebrands produced, a series of water pans was placed downstream of the firebrand generator. Details of the size and mass distribution of firebrands produced from the firebrand generator are presented below.

3. Results and discussion

The firebrand generator was designed to be able to produce firebrands characteristic to those produced from burning trees. Manzello et al. [22–23] conducted a series of experiments quantifying firebrand production from burning trees. In that work, an array of pans filled with water was used to collect the firebrands that were generated from the burning trees. The firebrands were subsequently dried and the sizes were measured using calipers and the dry mass was determined using a precision balance. Based on the results of two different tree species of varying crown height and moisture contents (Douglas-Fir trees and Korean pine trees) burning singly under no wind, cylindrical firebrands were observed to be produced. It was observed that

Author's personal copy

Fig. 2. (a) Digital pictures of Norway Spruce trees used to produce mulch for firebrand generator; details of the tree are shown. (b) Mulch that is produced and used per experiment (2.8 kg).

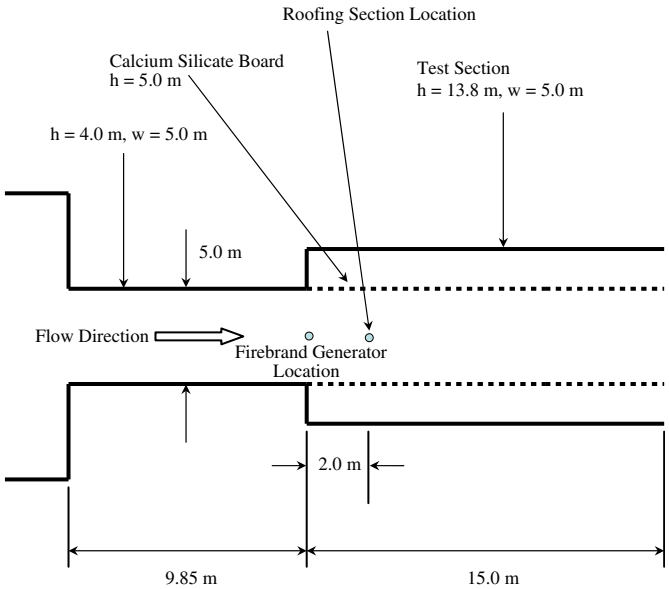

Fig. 3. Schematic of the FRWTF (top view). The location of the firebrand generator with respect to the roofing assemblies is shown.

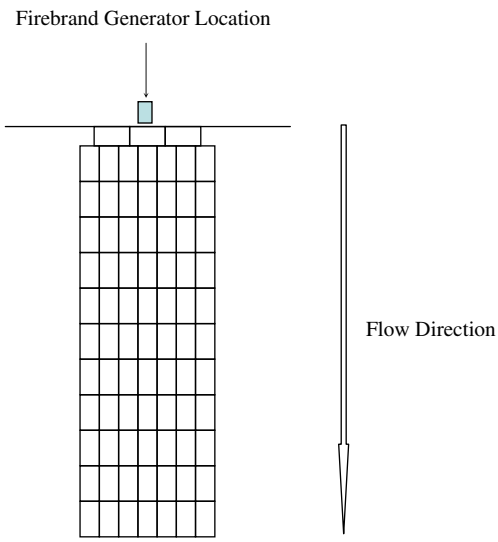

Fig. 4. Array of water-filled pans used to collect firebrands produced using firebrand generator. The pan array had a total length of 580 cm.

more than 85% of the firebrands produced from trees were less than 0.4 g.

In this study, the input conditions for the firebrand generator were intentionally selected to produce firebrands with mass up to 0.2 g. This was accomplished by sorting the Norway Spruce tree mulch using a series of filters prior to being loaded into the firebrand generator. A similar filtering procedure was used previously when other conifer species were used as the mulch source [16,18].

To be able to measure the firebrands produced from the firebrand generator, an array of water-filled pans was set up (see Fig. 4). The generated firebrands landed in the water-filled pans in the presence of water-quenched combustion. The firebrands were subsequently dried in an oven held at 104 °C for eight hours. For each of the firebrands collected, the firebrand diameter was determined by averaging the thinnest cross-section of the firebrand to that of the thickest cross-section of the firebrand. The firebrand sizes were then measured using precision calipers (1/100 mm resolution). Following size determination, the firebrands were then weighed using a precision balance (0.001 g resolution). Fig. 5 displays a comparison between the firebrands produced from the firebrand generator to those produced from burning conifers. From Fig. 5, the firebrand generator was capable of approximating the size and mass distribution of firebrands from burning trees up to 0.2 g. The uncertainty in determining the surface area is $\pm$10%.

After the size and mass distribution of firebrands produced from the firebrand generator was determined, a custom mounting assembly was constructed to support full-scale sections of ceramic tile roofing materials inside the FRWTF. For all the tests conducted, the firebrand generator was located 2.0 m from the mounting assembly (see Fig. 3).

3.1. Ceramic tile roofing assemblies—perfectly aligned tile

3.1.1. Pine needles and leaves under tiles not considered

A full-scale section (122 cm × 122 cm) of a ceramic tile roof assembly was constructed for testing (shown in Fig. 6). The pitch

Author's personal copy

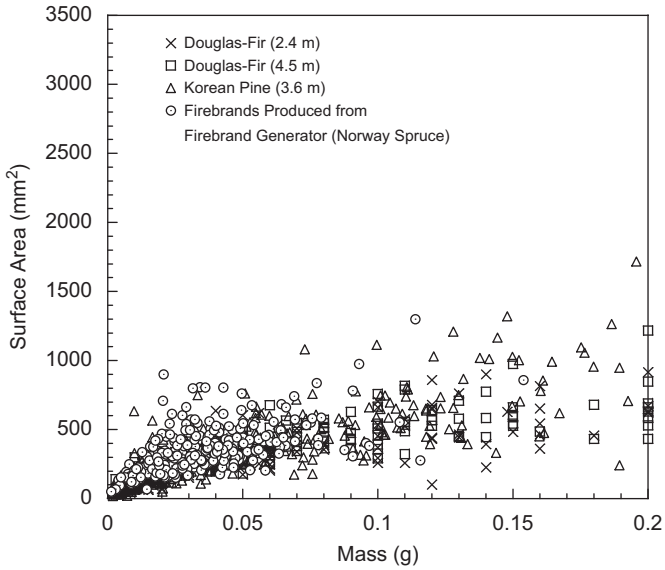

Fig. 5. Firebrands measured from burning trees to those produced using firebrand generator.

Fig. 6. Images of experiments conducted using OSB/CT without bird stops installed. Intense SI was observed within the OSB base layer and eventually FI was observed.

of the full-scale section was fixed at 25°. To be able to control the moisture content of OSB base layer, the experiments were designed in a modular fashion. Specifically, the 122 cm × 122 cm full section was comprised of four separate OSB pieces. This allowed each section to be oven dried, and once dried simply reassembled inside the custom mounting frame.

Table 1
Range of parameters considered for ceramic tile roofing assemblies.

U_∞ (m/s)	OSB/TP/CT No bird stops	OSB/TP/CT With bird stops	OSB/CT No bird stops	OSB/CT With bird stops
7	SI	NI	SI to FI	SI
9	SI	NI	SI to FI	SI

OSB (oriented strand board); TP (tar paper); CT (ceramic tiles); FI (flaming ignition); NI (no ignition); SI (smoldering ignition). A minimum of three experiments were conducted at each condition. The OSB base layer was oven dried in each case. The mulch loading was varied initially and it was observed that repeatable ignition events were observed for all experiments once the mulch loading was set to 2.8 kg.
All tests listed in Table 1 considered ceramic tiles perfectly arranged.

A parametric study was performed in an effort to quantify the range of conditions that ceramic tile roofing assemblies are vulnerable to ignition from firebrand attack. Table 1 displays a summary of results obtained; at least three replicate experiments were conducted for each condition. A starting velocity of 7 m/s was selected since most of the firebrands produced from the firebrand generator were observed to be lofted under these conditions. The velocity was subsequently increased to 9 m/s to ascertain if the results were velocity dependent.

When new, ceramic tile roofing assemblies are constructed by placing a base layer of oriented strand board (OSB), then tar paper is installed on top of the OSB for moisture protection, and finally ceramic tiles are applied. In the USA, there has been a dramatic shift to the use of OSB in North America. Historically plywood was the dominant material used in base layer of roofs [24]. The reason for this shift is based on cost since OSB is manufactured from smaller trees as compared to plywood and consists primarily of wood fragments. This results in less-expensive manufacturing costs. To simulate aged or weathered roofs, experiments were conducted without the application of tar paper.

Fig. 6 displays a sequence of images obtained from the case of OSB/CT without the installation of bird stops. Bird stops, as the name suggests, are intended to mitigate the construction of nests by birds under the ceramic tiles. Many ceramic tile roofing assemblies found in practice do not have bird stops installed [2]. Without the installation of bird stops, the firebrands were observed to be blown under the ceramic tiles. Eventually, several firebrands would collect and would produce smoldering ignition (SI) within the OSB base layer. With continued application of the airflow, holes were formed within the OSB and eventually the SI would undergo transition to flaming ignition (FI). The same result was observed independent of the applied wind tunnel flow.

Subsequent to this, a series of experiments were conducted to simulate an aged ceramic tile roof assembly (tar paper not installed) but in this case bird stops were installed. Fig. 7 displays images from these tests. Even though bird stops were installed, many firebrands were able to penetrate the gaps that exist between the tile and the bird stops. These firebrands were observed to produce SI within the OSB base layer resulting in holes in the OSB base layer in some cases. The same result was observed independent of the applied FRWTF flow. The SI ignition never transitioned to FI when bird stops were applied.

The tar paper was then used to simulate a newly constructed ceramic tile roof assembly. With the application of tar paper, experiments were conducted first without bird stops installed. Once again, firebrands were blown under the ceramic tiles. The firebrands were able to burn several holes within the tar paper

Author's personal copy

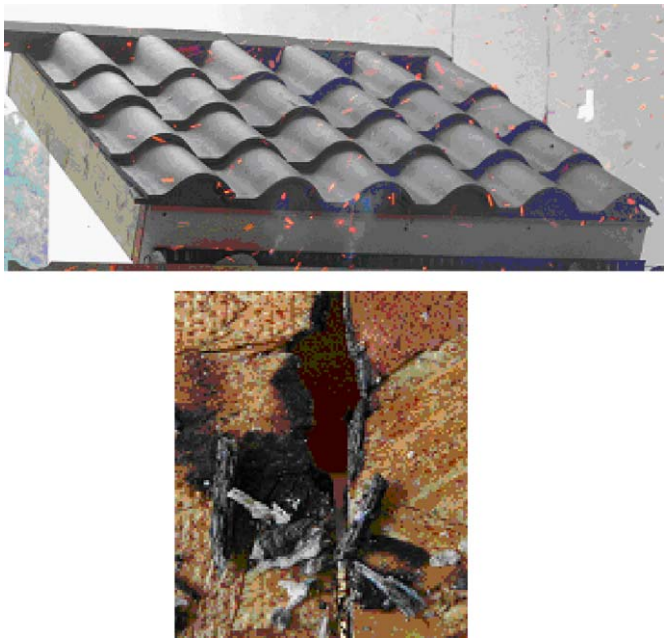

Fig. 7. Images of experiments conducted using OSB/CT with bird stops installed. Intense SI was observed within the OSB base layer.

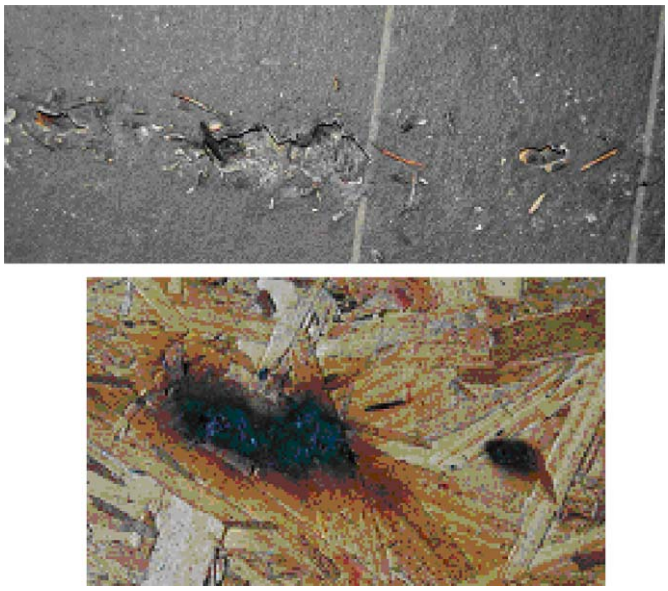

Fig. 8. Images of experiments conducted using OSB/TP/CT without bird stops installed. SI was observed within the OSB base layer.

and produce SI within the OSB base layer (see Fig. 8). The SI was not intense enough to result in the production of holes within the OSB base layer.

Tests were then conducted considered the application of tar paper with bird stops installed. These conditions resulted in no ignition in the tar paper and naturally no ignition within the OSB layer. The combination of the bird stop installation coupled with the tar paper provided a barrier to ignition under the limitations of experiments conducted as part of this work.

3.1.2. *Pine needles and leaves under tiles considered*

Table 2 displays the results of experiments conducted, but in addition to the parameters considered in Table 1, the influence of dried pine needles and leaves accumulating under the ceramic

Fig. 9. Images of experiments conducted using OSB/CT without bird stops installed. Dried needles and leaves have been inserted under the tiles. Intense SI was observed within the OSB base layer and eventually FI was observed.

Table 2
Range of parameters considered for ceramic tile roofing assemblies.

U_∞ (m/s)	OSB/TP/CT No bird stops Needles and leaves under tiles	OSB/TP/CT With bird stops Needles and leaves under tiles	OSB/CT No bird stops Needles and leaves under tiles	OSB/CT With bird stops Needles and leaves under tiles
7	SI	SI	SI to FI	SI
9	SI	SI	SI to FI	SI

OSB (oriented strand board); TP (tar paper); CT (ceramic tiles); FI (flaming ignition); NI (no ignition); SI (smoldering ignition). A minimum of three experiments were conducted at each condition. The OSB base layer was oven dried in each case. The mulch loading was varied initially and it was observed that repeatable ignition events were observed for all experiments once the mulch loading was set to 2.8 kg.
All tests listed in Table 2 considered ceramic tiles perfectly arranged.

Author's personal copy

Fig. 10. Images of experiments conducted using OSB/TP/CT with bird stops installed. Dried needles and leaves have been inserted under the tiles. SI was observed within the OSB base layer.

Fig. 11. Images of ceramic tile roof assemblies purposely constructed with gaps within the tiles. Multiple SI observed with OSB base layer.

tiles was considered. Even when bird stops are installed, as ceramic tile roof assemblies are exposed to the elements over time, the deposition of dried needles and leaves under the tiles would be expected. Fig. 9 displays a sequence of images from experiments that simulated an aged ceramic tile roofing assembly, OSB/CT, with dried needles and leaves inserted under the tiles. Not surprisingly, under a firebrand attack, the dried needles/leaves ignite via SI and this leads to intense ignition within the OSB base layer. The interesting result found in Table 1, namely that the combination of the bird stop installation coupled with the tar paper application provided a substantial barrier to ignition, does not hold true if dried needles and leaves were placed under the tiles. Fig. 10 clearly demonstrates that if needles and leaves are deposited under the tiles, ceramic tile roofing assemblies were ignitable under all conditions considered in this study. Once again, the current standards have no mechanism of testing these vulnerabilities.

3.2. Gaps within ceramic tile roofing assemblies

All of the experiments delineated above considered perfectly aligned roofing tiles. As ceramic tile roof assemblies age, the tile alignment does not remain so closely spaced [2]. In fact, large gaps develop within the tiles themselves leading to openings where firebrands may enter and accumulate. Earthquakes can also produce gaps and can break the tiles; this is often seen in Japan. To quantify this vulnerability, a series of experiments were conducted where the ceramic tiles were not fit together perfectly. An image of this type of construction is shown in Fig. 11. Due to the presence of gaps within the tiles, ignition under the tiles within the OSB base layer was observed: (1) whether or not bird stops were installed and (2) whether or not tar paper was installed. This result is somewhat obvious, in light of findings presented above, and suggests that when gaps exist within the alignment of the ceramic tiles, ignition of the assembly was rather easy. The application of dead needles and leaves was not even considered with gaps present in the alignment of the ceramic tiles as this would only compound the vulnerabilities to ignition.

4. Conclusions

An experimental campaign was conducted to investigate the vulnerabilities of ceramic tile roofing assemblies to ignition under a controlled firebrand attack using the NIST firebrand generator. Although current standards exist to test ignition of roofing decks to firebrands by placing a burning wood crib on top of a section of a roof assembly under an air flow, the dynamic process of multiple firebrands landing under ceramic tiles/gaps as a function of time is not taken into account.

Aged or weathered ceramic tile roofing assemblies were simulated by not installing tar paper. For simulated aged ceramic tile roof assemblies, without the installation of bird stops, the firebrands were observed to be blown under the ceramic tiles. Eventually, several firebrands would collect and would produce smoldering ignition (SI) within the OSB base layer. With continued application of the airflow, holes were formed within the OSB and eventually the SI would undergo transition to flaming ignition (FI). Simulated aged ceramic tile roof assemblies, with bird stops installed, were also constructed for testing. Even though bird stops were installed, many firebrands were able to penetrate the gaps that exist between the ceramic tiles and the bird stops. These firebrands were observed to produce SI within the OSB base layer; holes were observed in some cases within the OSB base layer. The SI ignition never transitioned to FI when bird stops were applied.

The tar paper was then used to simulate a newly constructed ceramic tile roof assembly. With the application of tar paper, experiments were conducted first without bird stops installed. Once again, firebrands were blown under the ceramic tiles. The firebrands were able to burn several holes within the tar paper and produced SI within the OSB base layer. The SI was not intense enough to result in

Author's personal copy

the production of holes within the OSB base layer. Tests were then conducted that considered the application of tar paper with bird stops installed. These conditions resulted in no ignition in the tar paper and thus no ignition within the OSB layer.

The influence of dried pine needles and leaves accumulating under the ceramic tiles was subsequently considered. Even when bird stops were installed, as ceramic tile roof assemblies were exposed to the elements over time, the deposition of dead needles and leaves under the tiles would be expected. The result, summarized above, namely that the combination of the bird stop installation coupled with the tar paper application provided a barrier to ignition, does not hold true if dead needles and leaves were placed under the tiles. If needles and leaves are deposited under the tiles, ceramic tile roofing assemblies are ignitable under all conditions considered in this study.

All of the experiments summarized above considered perfectly aligned roofing tiles. As ceramic tile roof assemblies age, the tile alignment does not remain so closely spaced. In fact, large gaps develop within the tiles themselves leading to openings where firebrands may enter and accumulate. To quantify this vulnerability, a final series of experiments were conducted where the ceramic tiles were not fit together perfectly. Due to the presence of gaps within the tiles, ignition under the tiles within the OSB base layer was observed: (1) whether or not bird stops were installed and (2) whether or not tar paper was installed. This result is somewhat obvious and suggests that when gaps exist within the alignment of the ceramic tiles, ignition of the assembly is rather easy. The application of dead needles and leaves was not even considered with gaps present in the ceramic tiles as this would only compound the vulnerabilities to ignition.

These results are the first ever experiments to ascertain the vulnerabilities of ceramic tile roofing assemblies. The experiments using the firebrand generator are extremely conservative; the firebrand attack lasted for six minutes. In real WUI and urban fires, firebrand attack has been observed for several hours and with winds in excess of 20 m/s [25]. Even under such conservative conditions in the present experiments, ceramic tile roofing assemblies were vulnerable to ignition from firebrand showers. The only exception (no ignition case) was the experiment that simulated a newly constructed roof assembly; namely OSB/TP/CT fitted with bird stops.

Due to design of the FRWTF, it was not possible to test using wind speeds higher than 10 m/s. It was also not possible to increase the duration of the firebrand attack using the present version of the firebrand generator. In real fires, due to higher wind speeds that have been observed, the airflow through the gaps of the bird stops would clearly be higher than these experiments. Manzello et al. [26] have quantitatively shown that the surface temperature of glowing firebrands increased as the applied airflow was increased; in that work OSB was observed to ignite under higher applied airflows, as compared to no ignition observed for lower applied airflows. As mentioned earlier, in a WUI or urban fire, the duration of firebrand attack would most likely be longer than the one simulated presently and would result in a OSB/TP/CT roof assembly fitted with bird stops being exposed to a greater number of firebrands, which would increase the potential for a greater number of firebrands to deposit under the ceramic tiles. Thus, in real fire, it is plausible that a greater number of firebrands would pass through the gaps of the bird stops (due to increased firebrand attack duration) and deposit under the ceramic roof tiles with higher glowing surface temperature (due to higher wind speed) as compared to the present experiments, providing favorable conditions for ignition [26]. Therefore, while the OSB/TP/CT roof assembly fitted with bird stops did not ignite in the present experiments, this assembly may indeed be vulnerable to ignition in real WUI and urban fires.

Acknowledgments

Dr. Samuel L. Manzello would like to acknowledge financial support from a fellowship from the Japan Society for the Promotion of Science (JSPS) and the Science & Technology Directorate of the US Department of Homeland Security. Mr. Alexander Maranghides and Dr. William 'Ruddy' Mell of BFRL-NIST are acknowledged for helpful discussion during the course of this work. Mr. Marco G. Fernandez, Engineering Technician of BFRL-NIST, is acknowledged for carefully preparing shipments of USA roofing materials to Japan. Mr. John R. Shields of BFRL-NIST is acknowledged for providing suggestions on the roof construction. Dr. Ichiro Hagiwara of BRI is acknowledged for his support of these experiments. The authors would like to acknowledge the reviewers for providing insightful suggestions to improve the quality of the paper.

References

[1] 2007 Annual Report of the Insurance Commissioner, California Department of Insurance (http://www.insurance.ca.gov).
[2] J.W. Mitchell, O. Patashnik, Firebrand protection as the key design element for structural survival during catastrophic wildfire fires. in: Proceedings of the Tenth International Conference on Fire and Materials Conference, San Francisco, CA, 2007.
[3] R. Blanchi, J.E. Leonard, R.H. Leicester, Lessons learnt from post-fire surveys at the urban interface in Australia. in: Proceedings of the Fifth International Conference on Forest Fire Research, Figueria da Foz, Portugal.
[4] F. Albini, Transport of firebrands by line thermals, Combustion Science and Technology 32 (1983) 277–288.
[5] A. Muraszew, J.F. Fedele, Statistical model for spot fire spread. The Aerospace Corporation Report No. ATR-77758801, Los Angeles, CA, 1976.
[6] C.S. Tarifa, P.P. del Notario, F.G. Moreno, On the flight paths and lifetimes of burning particles of wood, Proceedings of the Combustion Institute 10 (1965) 1021–1037.
[7] C.S., Tarifa, P.P. del Notario, F.G. Moreno, Transport and combustion of fire brands. Instituto Nacional de Tecnica Aerospacial "Esteban Terradas", Final Report of Grants FG-SP 114 and FG-SP-146, vol. 2., Madrid, Spain, 1967.
[8] S.D. Tse, A.C. Fernandez-Pello, On the flight paths of metal particles and embers generated by power lines in high winds and their potential to initiate wildfires, Fire Safety Journal 30 (1998) 333–356.
[9] J.P. Woycheese, Brand lofting and propagation for large-scale fires. Ph.D. Thesis, University of California, Berkeley, 2000.
[10] J.P. Woycheese, Wooden disk combustion for spot fire spread, in: S. Grayson (Ed.), Ninth Fire Science and Engineering Conference Proceedings (INTERFLAM), Interscience Communications, London, 2001, pp. 101–112.
[11] I.K. Knight, The design and construction of a vertical wind tunnel for the study of untethered firebrands in flight, Fire Technology 37 (2001) 87–100.
[12] R. Anthenien, S.D. Tse, A.C. Fernandez-Pello, On the trajectories of embers initially elevated or lofted by small scale ground fire plumes in high winds, Fire Safety Journal 41 (2006) 349–363.
[13] K. Himoto, T. Tanaka, Transport of disk shaped firebrands in a turbulent boundary layer, in: D.T. Gottuk, B.Y. Lattimer (Eds.), Fire Safety Science—Proceedings of the Eight International Symposium, vol. 8, IAFSS, 2005, pp. 433–444.
[14] N. Sardoy, J.L. Consalvi, A. Kaiss, B. Porterie, A.C. Fernandez-Pello, Modeling transport combustion of firebrands from burning trees, Combustion and Flame 150 (2007) 151–169.
[15] N. Sardoy, J.L. Consalvi, A. Kaiss, A.C. Fernandez-Pello, B. Porterie, Numerical study of ground-level distribution of firebrands generated by line-fires, Combustion and Flame 154 (2008) 478–488.
[16] S.L. Manzello, J.R. Shields, J.C. Yang, Y. Hayashi, D. Nii, On the use of a firebrand generator to investigate the ignition of structures in WUI fires, in: Proceedings of the Eleventh International Conference on Fire Science and Engineering (INTERLFAM), Interscience Communications, London, 2007, pp. 861–872.
[17] California Code of Regulations, Title 24, Part 9, California Fire Code, Article 8604 B 2.1, Materials and Construction Methods for Exterior Wildfire Exposure, Attic Ventilation.
[18] S.L. Manzello, J.R. Shields, Y. Hayashi, D. Nii, Investigating the vulnerabilities of structures to ignition from a firebrand attack, in: B. Karlsson (Ed.), Fire Safety Science—Proceedings of the Ninth International Symposium, vol. 9, IAFSS, 2008, pp. 143–154.
[19] Standard Test Methods for Fire Tests of Roof Coverings, ASTM E108, American Society for Testing and Materials, West Conshohocken, PA.
[20] S.L. Manzello, Y. Hayashi, T. Yoneki, Y. Yamamoto, Firebrand attack on ceramic tile roofing assemblies. in: Proceedings of the Eleventh International Conference on Fire and Materials, San Francisco, CA, 2009, pp. 267–276.

Author's personal copy

[21] S.L. Manzello, J.R. Shields, T.G. Cleary, A. Maranghides, W.E. Mell, J.C. Yang, Y. Hayashi, D. Nii, T. Kurita, On the development and characterization of a firebrand generator, Fire Safety Journal 43 (2008) 258–268.
[22] S.L. Manzello, A. Maranghides, W.E. Mell, Firebrand generation from burning vegetation, International Journal of Wildland Fire 16 (2007) 458–462.
[23] S.L. Manzello, A. Maranghides, J.R. Shields, W.E. Mell, Y. Hayashi, D. Nii, Mass and size distribution of firebrands generated from burning Korean pine (*Pinus koraiensis*) trees, Fire and Materials Journal 33 (2009) 21–31.
[24] R.S. White, G. Winandy, Fire performance of Oriented Strand Board (OSB), in: Seventeenth Annual BCC Conference on Fire Retardancy, 2006, pp. 297–309.
[25] J.W. Mitchell Power lines and catastrophic wildland fire in Southern California, in: Proceedings of the Eleventh International Conference on Fire and Materials, San Francisco, CA, 2009, pp. 225–238.
[26] S.L. Manzello, S.H. Park, T.G. Cleary, Investigation on the ability of glowing firebrands deposited within crevices to ignite common building materials, Fire Safety Journal 44 (2009) 894–900.